No. ACN21E4 2019.04

Preface

Thank you for purchasing our Digital Temperature Indicating Controller ACN-200. This manual contains instructions for the mounting, functions, operations and notes when operating the ACN-200. To ensure safe and correct use, thoroughly read and understand this manual before using this controller. To prevent accidents arising from the misuse of this controller, please ensure the operator receives this manual.

Abbreviations used in this manual

Abbreviation	Term
PV	Process variable
SV	Desired value

Characters used in this manual

Indication	0	1	2	3	4	5	6	7	8	9	C	A	J	K	P	T
Number, ℃, Alphabet	0	1	2	3	4	5	6	7	8	9	℃	A	J	K	P	T

⚠ Caution

- This instrument should be used in accordance with the specifications described in the manual. If it is not used according to the specifications, it may malfunction or cause a fire.
- Be sure to follow the warnings, cautions and notices. If they are not observed, serious injury or malfunction may occur.
- The contents of this instruction manual are subject to change without notice.
- Care has been taken to ensure that the contents of this instruction manual are correct, but if there are any doubts, mistakes or questions, please inform our sales department.
- This instrument is designed to be installed through a control panel. Measures must be taken to ensure that the operator cannot touch power terminals or other high voltage sections.
- Any unauthorized transfer or copying of this document, in part or in whole, is prohibited.
- Shinko Technos Co., Ltd. is not liable for any damage or secondary damage(s) incurred as a result of using this product, including any indirect damage.

Safety Precautions (Be sure to read these precautions before using our products.)

The safety precautions are classified into 2 categories: “Warning” and “Caution”. Depending on the circumstances, procedures indicated by ⚠ Caution may result in serious consequences, so be sure to follow the directions for usage.

⚠ Warning Procedures which may lead to dangerous conditions and cause death or serious injury, if not carried out properly.

⚠ Caution Procedures which may lead to dangerous conditions and cause superficial to medium injury or physical damage or may degrade or damage the product, if not carried out properly.

⚠ Warning

- To prevent an electrical shock, fire or damage to the instrument, parts replacement may only be undertaken by Shinko or other qualified service personnel.

⚠ Safety Precautions

- To ensure safe and correct use, thoroughly read and understand this manual before using this instrument.
- This instrument is intended to be used for industrial machinery, machine tools and measuring equipment. Verify correct usage after purpose-of-use consultation with our agency or main office. (Never use this instrument for medical purposes with which human lives are involved.)
- External protection devices such as protective equipment against excessive temperature rise, etc. must be installed, as malfunction of this product could result in serious damage to the system or injury to personnel. Proper periodic maintenance is also required.
- This instrument must be used under the conditions and environment described in this manual. Shinko Technos Co., Ltd. does not accept liability for any injury, loss of life or damage occurring due to the instrument being used under conditions not otherwise stated in this manual.

⚠ Caution with Respect to Export Trade Control Ordinance

To avoid this instrument from being used as a component in, or as being utilized in the manufacture of weapons of mass destruction (i.e. military applications, military equipment, etc.), please investigate the end users and the final use of this instrument. In the case of resale, ensure that this instrument is not illegally exported.

1. Model

1.1 Model

A C N - 2	☐	☐ - ☐ / ☐ , ☐				Series name: ACN-200
Control Action (*1)	1					ON/OFF Control action
	2					PD Control action
Alarm Output (*1), (*2)		0				No Alarm Action
		1				High Limit alarm
		1			H	High Limit with Standby alarm
		2				Low Limit alarm
		2			H	Low Limit with Standby alarm
		4				High/Low Limits alarm
		4			H	High/Low Limits with Standby alarm
		6				High/Low Limit Range alarm
		8				Process High alarm
		9				Process Low alarm
Control Output			R			Relay contact: 1c
			S			Non-contact voltage (for SSR drive): 12 V DC±15%
Input				E		Thermocouple (K, J)
				R		RTD (Pt100)

(*1) Control Action and Alarm Type can be selected with the DIP switch.
When shipped, user specified Control Action and Alarm Type have been set on the controller.
(*2) For the Alarm Action with Standby, "H" is attached to the end of the model name.

1.2 How to Read the Model Label

The model label is attached to the left side of case and inner assembly.

• Label on the left side of case

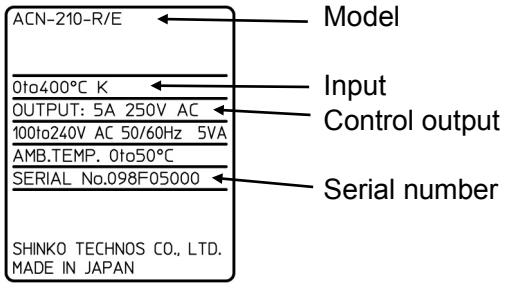

(Fig. 1.2-1)

• Label on the inner assembly

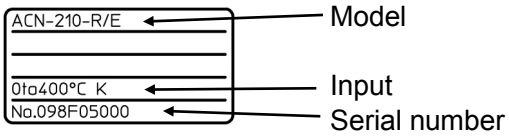

(Fig. 1.2-2)

2. Name and Functions

Alarm Function Not Added

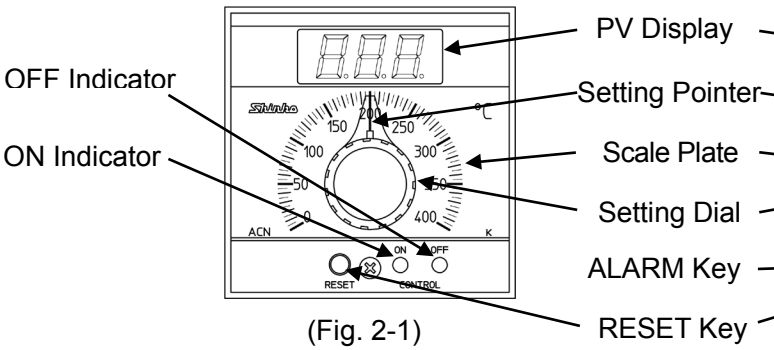

(Fig. 2-1)

Alarm Function Added

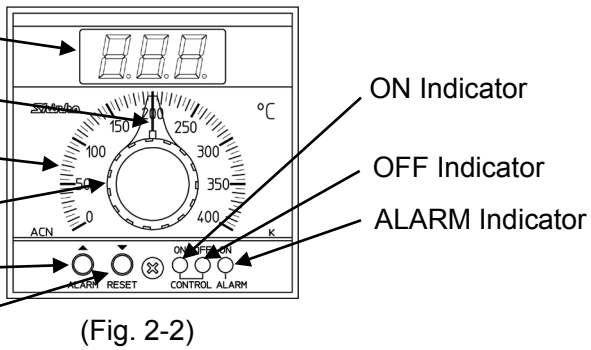

(Fig. 2-2)

PV Display: Indicates PV with the red LED.
Setting Dial: Sets SV (desired value) by turning the Setting Pointer to the SV on the Scale Plate.
RESET Key: Performs Auto-reset in PD Control action by pressing this key for 3 seconds.
In the Alarm Setting Mode, this key works as a DOWN Key.
ON Indicator: The green LED lights when control output is ON.
OFF Indicator: The red LED lights when control output is OFF.
ALARM Key: The unit enters the Alarm Setting Mode by pressing this key for 3 seconds.
In the Alarm Setting Mode, this key works as an UP Key.
ALARM Indicator: When alarm output is ON, the red indicator is lit.

3. Setup

Setup should be done before using this controller according to the user's' conditions, using the DIP switch (SW202):
Setting the Control Action and Alarm Type (when the Alarm Function is added)

Factory default value: User specified Control Action and Alarm Type
If the user's specification is the same as the default value of the ACN-200, or if setup has already been complete, it is not necessary to set up the controller.

3.1 Taking the Internal Assembly Out

Unfasten the screw at the bottom of the front face by rotating it counterclockwise, using a Phillips-head screw-driver suitable for the screw size.
Take the internal assembly out from the case by holding the both sides of the front panel. (Fig. 3.1-1)

3.2 Switches Setting

Select a Control Action and Alarm Type with the DIP switch (SW202), using a small flat blade screwdriver or tweezers. (Fig. 3.2-1) (Table 3.2-1)

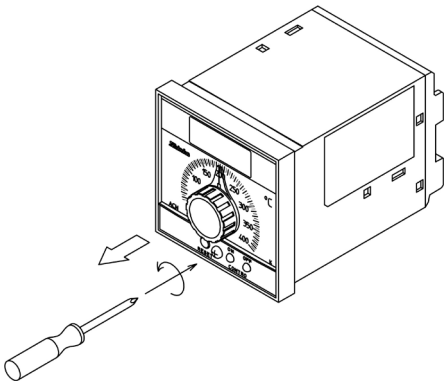

(Fig. 3.1-1)

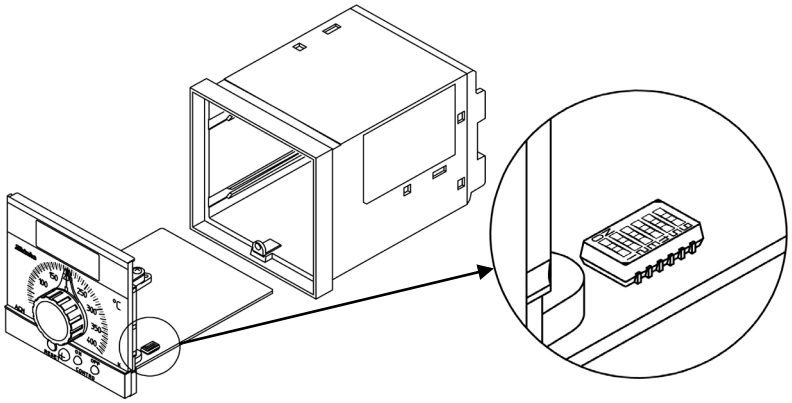

(Fig. 3.2-1)

(Table 3.2-1) Control Action and Alarm Type Selection: DIP switch (SW202)

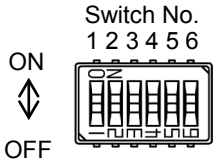

Control Action and Alarm Type		Switch No. and Status					
		1	2	3	4	5	6
Control Action	PD Control	OFF					OFF
	ON/OFF Control	ON					OFF
Alarm Type (*)	No Alarm Action		OFF	OFF	OFF	OFF	OFF
	High Limit alarm		ON	OFF	OFF	OFF	OFF
	High Limit with Standby alarm		ON	OFF	OFF	ON	OFF
	Low Limit alarm		OFF	ON	OFF	OFF	OFF
	Low Limit with Standby alarm		OFF	ON	OFF	ON	OFF
	High/Low Limits alarm		ON	ON	OFF	OFF	OFF
	High/Low Limits with Standby alarm		ON	ON	OFF	ON	OFF
	High/Low Limit Range alarm		OFF	OFF	ON	OFF	OFF
	Process High alarm		ON	OFF	ON	OFF	OFF
	Process Low alarm		OFF	ON	ON	OFF	OFF

(*) For details of Alarm Action, refer to Section "7.2 Alarm Action" (pages 9, 10).

3.3 Insertion of the Inner Assembly

Insert the internal assembly into the case by matching the groove inside the case, while holding both sides of the front panel. Use a Phillips-head screw driver to fasten the screw at the bottom of the front face, and rotate it clockwise. The tightening torque should be 0.3 N•m.

4. Mounting to the Control Panel

4.1 Site Selection

⚠ Caution

Use within the following temperature and humidity ranges.
Temperature: 0 to 50℃ (32 to 122℉) (No icing), Humidity: 35 to 85 %RH (Non-condensing)
If the ACN-200 is mounted through the face of a control panel, the ambient temperature of the unit – not the ambient temperature of the control panel – must be kept under 50℃. Otherwise the life of electronic parts (especially electrolytic capacitors) of the unit will be shortened.

This instrument is intended to be used under the following environmental conditions (IEC61010-1):
Overvoltage category Ⅱ, Pollution degree 2

Ensure the mounting location corresponds to the following conditions:
- A minimum of dust, and an absence of corrosive gases
- No flammable, explosive gases
- No mechanical vibrations or shocks
- No exposure to direct sunlight, an ambient temperature of 0 to 50℃ (32 to 122℉) that does not change rapidly
- An ambient non-condensing humidity of 35 to 85 %RH
- No large capacity electromagnetic switches or cables through which large current is flowing.
- No water, oil, chemicals or the vapors of these substances can come into direct contact with the unit

4.2 External Dimensions (Scale: mm)

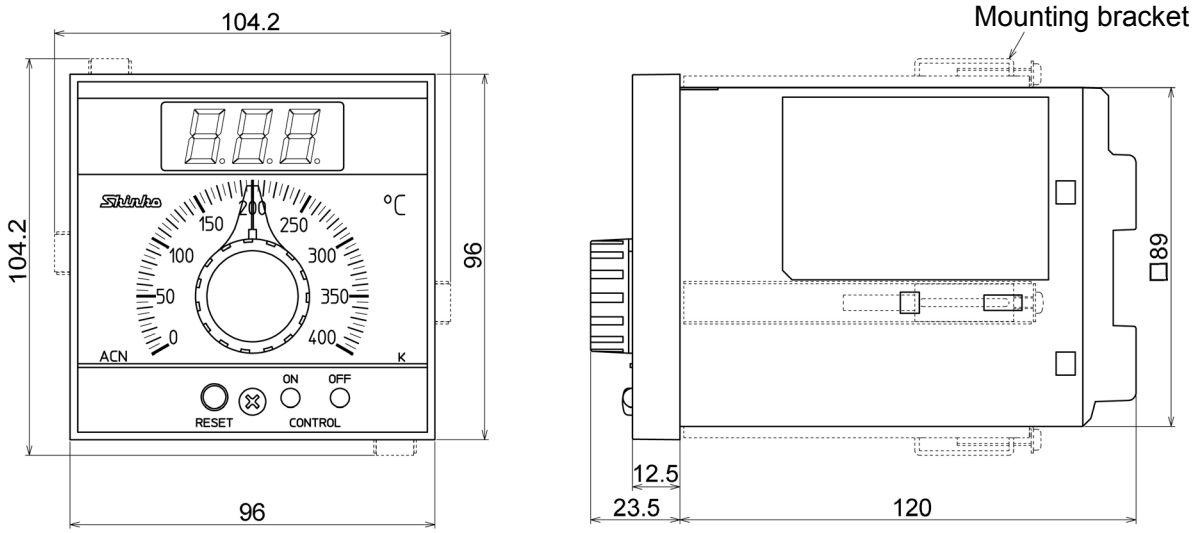

(Fig. 4.2-1)

4.3 Panel Cutout (Scale: mm)

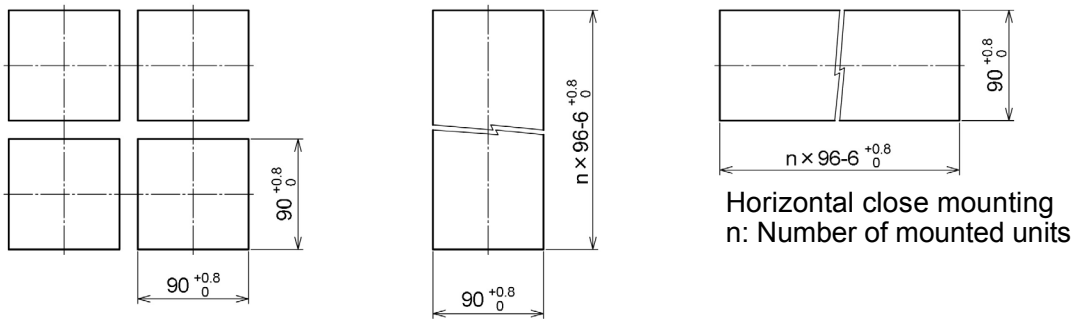

Horizontal close mounting
n: Number of mounted units

Lengthwise close mounting
n: Number of mounted units

(Fig. 4.3-1)

4.4 Mounting and Removal

⚠ Caution

As the case is made of resin, do not use excessive force while screwing in the mounting bracket, or the case could be damaged.
The tightening torque should be 0.12 N•m.

Mounting

Mount the controller vertically to a flat, rigid panel.
Mountable panel thickness: 1 to 8 mm

(1) Insert the unit from the front of the panel. (Fig. 4.4-1)
(2) Attach the mounting brackets to the slots at the top and bottom (or right and left) of the case, and secure the controller in place with the screws provided. (Fig. 4.4-2)

Mounting Brackets Location

- Lengthwise close mounting: Right and left of the case
- Horizontal close mounting: Top and bottom of the case

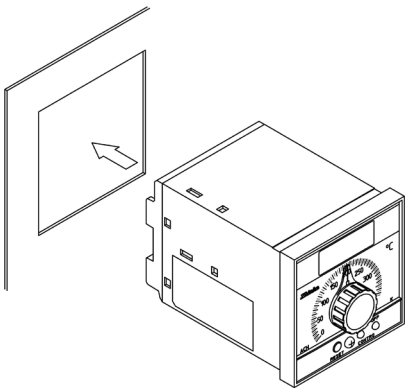

(Fig. 4.4-1)

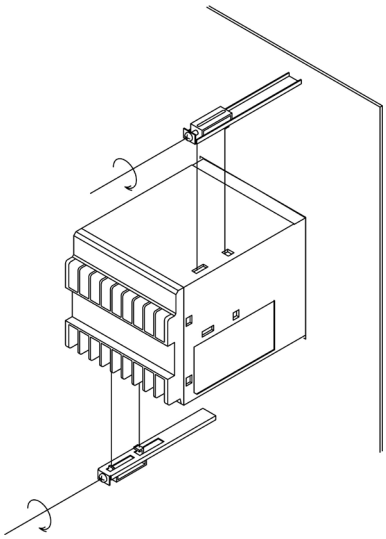

(Fig. 4.4-2)

Removal

(1) Turn the power to the unit OFF, and disconnect all wires.
(2) Unfasten screws of the mounting brackets, and remove the brackets.
(3) Pull the unit out from the front of the panel.

5. Wiring

⚠ Warning

Turn the power supply to the instrument off before wiring.
Working on or touching the terminal with the power switched on may result in severe injury or death due to electrical shock.

⚠ Caution

- The terminal block of this instrument is designed to be wired from the bottom. The lead wire must be inserted from the bottom of the terminal, and fastened by the terminal screw. The torque should be 0.63 N•m.
- Use a thermocouple and compensating lead wire according to the sensor input specifications of this controller.
- Use the 3-wire RTD according to the sensor input specifications of this controller.
- This instrument does not have a built-in power switch, circuit breaker and fuse.
  It is necessary to install a power switch, circuit breaker and fuse near the controller.
  (Recommended fuse: Time-lag fuse, rated voltage 250 V AC, rated current 2 A)
- When using a relay contact output type, externally use a relay according to the capacity of the load to protect the built-in relay contact.
- When wiring, keep input wires (thermocouple, RTD) away from AC sources or load wires.
- Do not apply a commercial power source to the sensor which is connected to the input terminal nor allow the power source to come into contact with the sensor.

5.1 Lead Wire Solderless Terminal

Use a solderless terminal with an insulation sleeve in which an M3 screw fits as shown below.
The tightening torque should be 0.63 N•m.

Solderless terminal	Manufacturer	Model	Torque
Y-type	Nichifu Terminal Industries Co.,Ltd.	TMEV1.25Y-3	0.63 N•m
	Japan Solderless Terminal MFG Co.,Ltd.	VD1.25-B3A	
Ring-type	Nichifu Terminal Industries Co.,Ltd.	TMEV1.25-3	
	Japan Solderless Terminal MFG Co.,Ltd.	V1.25-3	

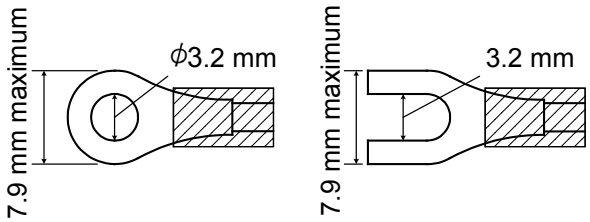

(Fig. 5.1-1)

5.2 Terminal Arrangement

Alarm Function Not Added:

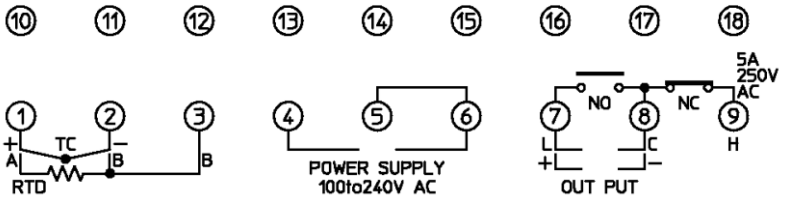

TC: Thermocouple input
RTD: RTD input
OUTPUT: Control output

(Fig. 5.2-1)

Alarm Function Added:

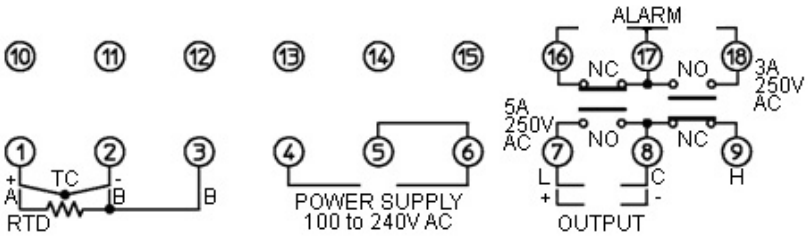

TC: Thermocouple input
RTD: RTD input
OUTPUT: Control output
ALARM: Alarm output

(Fig. 5.2-2)

5.3 Wiring Example

- Number of Shinko SSR units when connected in parallel
  SA-400 series: 5 units
  SA-500 series: 2 units
- For relay contact output, to prevent the unit being damaged by the harmful effects of unexpected high level noise, it is recommended that a surge absorber be installed between the electromagnetic switch coils.

ACN-220-S/E

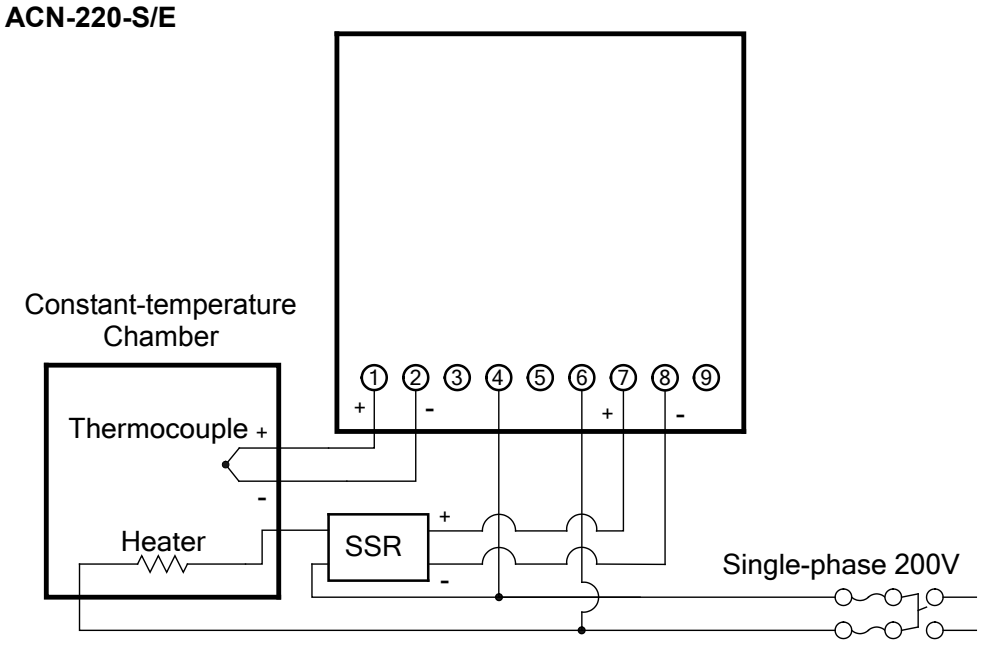

(Fig. 5.3-1)

ACN-224-S/E, H

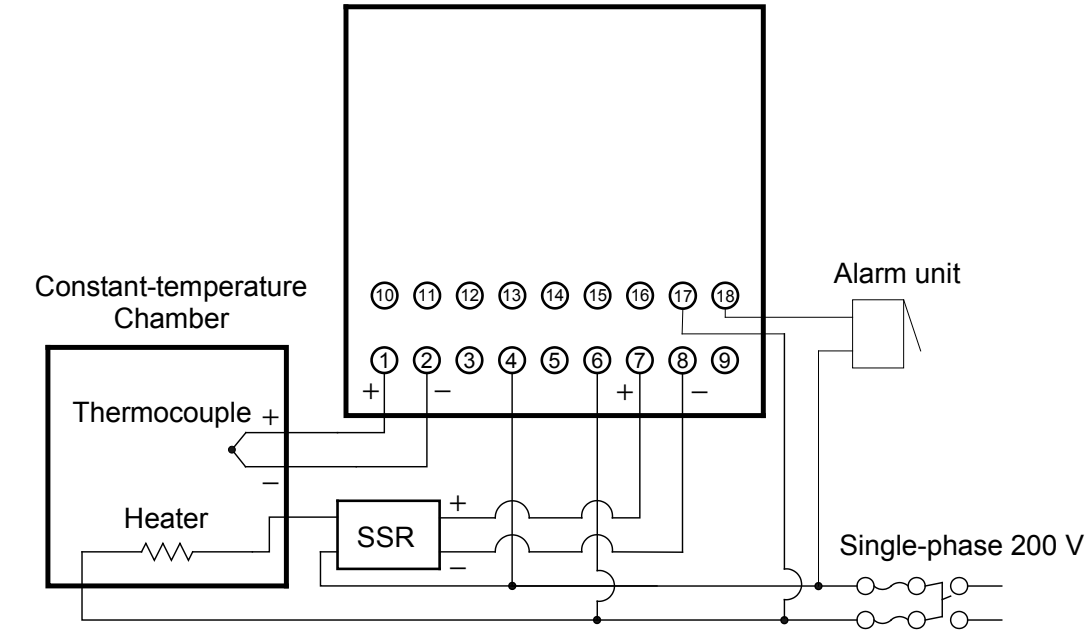

(Fig. 5.3-2)

6. Operation

6.1 Starting Operation

After the setup, mounting to the control panel, and wiring are completed, operate the unit following the procedure below.

(1) Switch the power supply to the ACN-200 ON.

For approx. 3 seconds after the power is turned on, sensor input characters and temperature unit ℃ [K: kC, J: JC, Pt100: PtC] are indicated on the PV Display. During this time, all outputs and LED indicators are in OFF status. After that, the PV Display indicates the PV.

(2) Set the SV.

Set the SV (desired value) by turning the Setting Dial so that the Setting Pointer matches the SV on the Scale Plate.

(3) Set the Alarm value (When the Alarm Function is added)

Set the Alarm action point.

Keep pressing the ALARM Key for 3 seconds.

The unit enters the Alarm Value Setting Mode, and the PV Display alternately indicates [A1] and Alarm Value.

Set the Alarm Value with the ALARM (UP) Key and RESET (DOWN) Key.

Setting range is shown below (Table 6.1-1). Alarm Action is activated even when the value is set to 0 (zero).

(Table 6.1-1)

Alarm Type	Setting Range
High Limit alarm	-199 to input span
High Limit with Standby alarm	
Low Limit alarm	
Low Limit with Standby alarm	
High/Low Limits alarm	0 to input span
High/Low Limits with Standby alarm	
High/Low Limit Range alarm	
Process High alarm	
Process Low alarm	

If the unit does not operate for 5 seconds, the Alarm Value will be registered, and the unit will revert to the PV Display Mode.

(4) Turn the Load Circuit Power ON.

Control Action starts so as to keep the control target at the SV.

6.2 Performing Auto-reset (Offset Correction)

Auto-reset can be performed in PD Control action.

It cannot be performed in ON/OFF Control action.

When PV is stabilized (PV indication is stable) within the Proportional Band, press the RESET Key for 3 seconds. Auto-reset will be performed, and offset will be automatically corrected.

During auto-reset, the 1st dot from the right on the PV Display flashes.

Since the corrected value is internally memorized, it is not necessary to perform the Auto-reset again as long as the process is the same.

Auto-reset is finished in approximately 4 minutes. It cannot be released while performing this function.

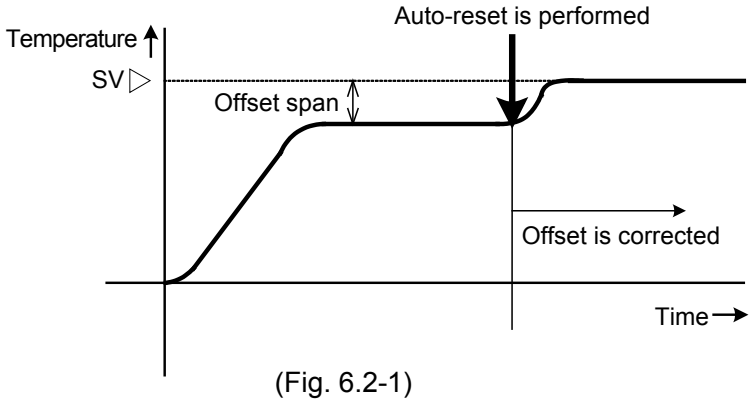

(Fig. 6.2-1)

7. Action Explanation

7.1 Control Output Action

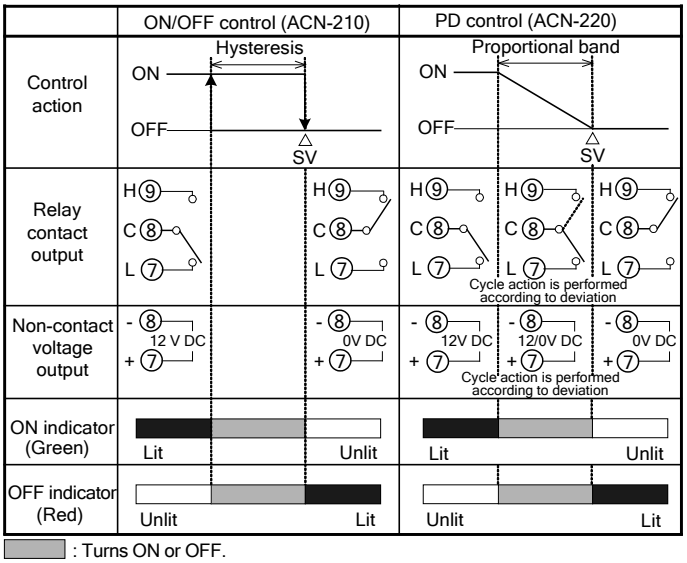

7.2 Alarm Action

High Limit Alarm

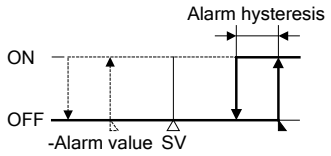

[Setting example]
SV : 200?
Alarm value : 5?
Alarm hysteresis : 1? (Fixed)
[Alarm action]
205? ? PV: Alarm output is turned ON.
PV ? 204? : Alarm output is turned OFF.

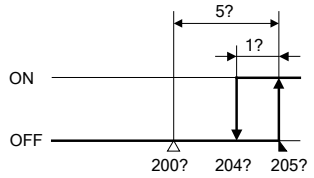

High Limit with Standby Alarm

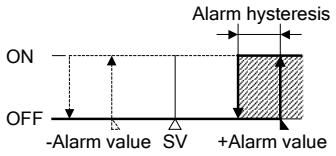

[Setting example]
SV : 200?
Alarm value : 5?
Alarm hysteresis : 1? (Fixed)
[Alarm action]
205? ? PV: Alarm output is turned ON.
PV ? 204? : Alarm output is turned OFF.

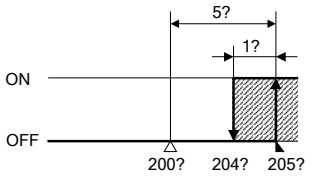

Low Limit Alarm

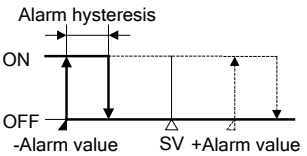

[Setting example]
SV : 200?
Alarm value : -5?
Alarm hysteresis : 1? (Fixed)
[Alarm action]
PV ? 195? : Alarm output is turned ON.
196? ? PV: Alarm output is turned OFF.

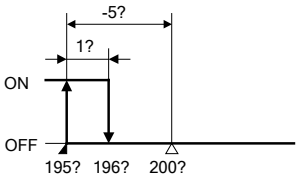

Low Limit with Standby Alarm

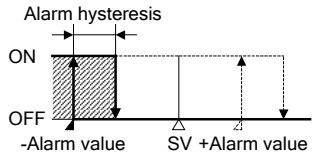

[Setting example]
SV : 200?
Alarm value : -5?
Alarm hysteresis : 1? (Fixed)
[Alarm action]
PV ? 195? : Alarm output is turned ON.
196? ? PV: Alarm output is turned OFF.

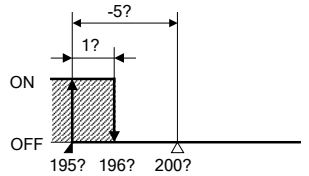

High/Low Limits Alarm

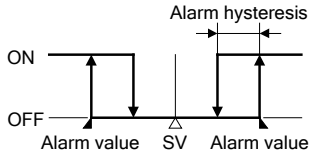

[Setting example]
SV : 200?
Alarm value : 5?
Alarm hysteresis : 1? (Fixed)
[Alarm action]
205? ? PV or PV ? 195? : Alarm output is turned ON.
196? ? PV ? 204? : Alarm output is turned OFF.

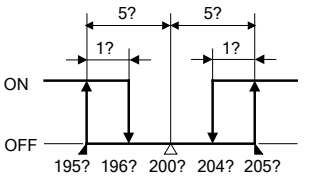

High/Low Limits with Standby Alarm

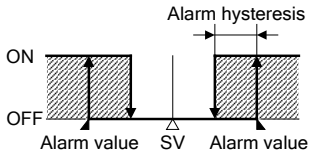

[Setting example]
SV : 200?
Alarm value : 5?
Alarm hysteresis : 1? (Fixed)
[Alarm action]
205? ? PV or PV ? 195? : Alarm output is turned ON.
196? ? PV ? 204? : Alarm output is turned OFF.

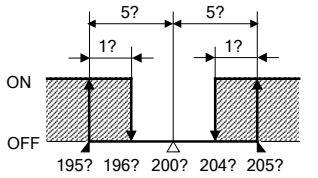

: Alarm output is in Standby. If SV is changed, the Standby function will be activated again.
When PV enters the range of alarm output OFF, the Standby function is released.
For High Limit alarm and High/Low Limits alarm, the alarm output is activated when the indication is overscale (p.11), and the Standby function is released for the alarm with Standby function.
For Low Limit alarm and High/Low Limits alarm, the alarm output is activated when the indication is underscale (p.11), and the Standby function is released for the alarm with Standby function.

High/Low Limit Range Alarm	Process High Alarm	Process Low Alarm
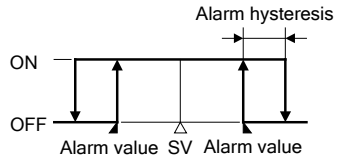 [Setting example] SV : 200? Alarm value : 5? Alarm hysteresis : 1? (Fixed) [Alarm action] 195? ? PV ? 205? : Alarm output is turned ON. 206? ? PV or PV ? 194? : Alarm output is turned OFF. 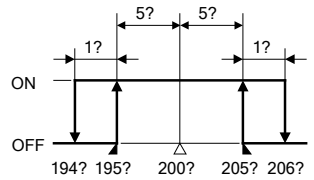	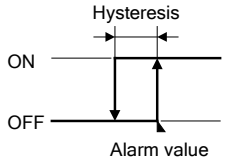 [Setting example] Alarm value : 205? Alarm hysteresis : 1? (Fixed) [Alarm action] 205? ? PV: Alarm output is turned ON. PV ? 204? : Alarm output is turned OFF. 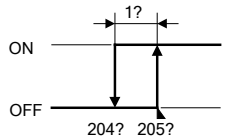	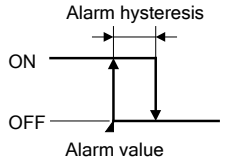 [Setting example] Alarm 1 value : 195? Alarm 1 hysteresis: 1? (Fixed) [Alarm action] PV ? 195? : Alarm output is turned ON. 196? ? PV: Alarm output is turned OFF. 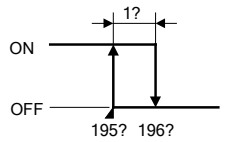

8. Specifications

Rating	Rated scale	<table><tr><th colspan="2">Input</th><th>Scale range</th><th>Resolution</th></tr><tr><td rowspan="2">E</td><td>K</td><td>0 to 400℃ [5℃]*</td><td>1℃</td></tr><tr><td>J</td><td>0 to 400℃ [5℃]*</td><td>1℃</td></tr></table>* One division of the total scale <table><tr><th colspan="2">Input</th><th>Scale range</th><th>Resolution</th></tr><tr><td>R</td><td>Pt100</td><td>0 to 100℃ [1℃]*</td><td>1℃</td></tr></table>* One division of the total scale
	Input	Thermocouple: K, J, External resistance: 100 Ω maximum RTD: Pt100, 3-wire type Allowable input lead wire resistance: 10 Ω maximum per wire
	Supply voltage	100 to 240 V AC 50/60 Hz
	Allowable voltage fluctuation range	85 to 264 V AC
General Structure	Dimensions	96 x 96 x 120 mm (W x H x D)
	Mounting	Flush
	Case	Material: Polycarbonate resin Color: Dark gray
Indication Structure	PV Display	Indicates PV. Red LED 3-digits, Character size: 14.3 x 8.0 mm (H x W)
	Indicator	ON indicator: The green LED lights when control output is ON. OFF indicator: The red LED lights when control output is OFF. ALARM indicator: The red LED lights when alarm output is ON.
Setting Structure	Potentiometer	Sets SV. Scale length: 121 mm (Angle 240 degrees)
	Function key	RESET Key : Performs Auto-reset. In the Alarm Setting Mode, this key works as a DOWN Key. ALARM Key: Moves to the Alarm Setting Mode. In the Alarm Setting Mode, this key works as an UP Key.
Control Structure	SV setting	Analog setting by the potentiometer
Indication Performance	Indication accuracy	Within ±0.5% of each input span ±1 digit
	Input sampling period	250 ms
Control Performance	Setting accuracy	Within ±1.0% of each input span
	Control action	PD Control action (with Auto-reset function, DIP switch No.1: OFF) ON/OFF Control action (DIP switch No.1: ON) <table><tr><td>Proportional band</td><td>2.5% of each input span</td></tr><tr><td>Integral time</td><td>50 seconds</td></tr><tr><td>Proportional cycle</td><td>Relay contact output: 30 seconds Non-contact voltage output: 3 seconds</td></tr><tr><td>ON/OFF hysteresis</td><td>0.6% of each input span</td></tr></table>

	Control output	Relay contact, 1c: Control capacity: 5 A 250 V AC (resistive load) 2 A 250 V AC (inductive load cosϕ=0.4) Electrical life: 100,000 cycles Non-contact voltage (for SSR drive): 12 V DC±15%, Max 40 mA DC (short circuit protected)
Alarm Function	Alarm output	The Alarm action point is set as a ±deviation from SV (except Process alarm). When the PV is out of the range, the alarm output turns ON or OFF (in the case of High/Low Limit Range alarm). If the Alarm Function is specified, one type can be selected with the DIP switch: No Alarm Action, High Limit alarm, High Limit with Standby alarm, Low Limit alarm, Low Limit with Standby alarm, High/Low Limits alarm, High/Low Limits with Standby alarm, High/Low Limit Range alarm, Process High alarm and Process Low alarm. For details, refer to Section "7.2 Alarm Action". (pages 9, 10) Setting accuracy: Same as the Setting Accuracy of Control Performance Action: ON/OFF action Hysteresis: 1℃ Output: Relay contact, 1c Control capacity:3A 250 V AC (resistive load) 1 A 250 V AC (inductive load cosϕ=0.4) Electrical life: 100,000 cycles
Insulation/ Dielectric Strength	Circuit insulation configuration	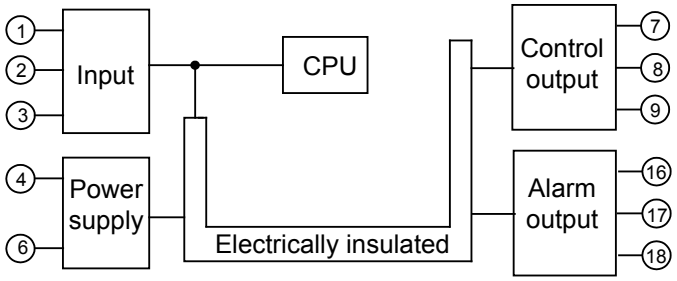
	Insulation resistance	10 MΩ minimum, at 500 V DC (between each terminal)
	Dielectric strength	1.5 kV AC for 1minute: Between input terminal and power terminal, Between output terminal and power terminal
Attached Functions	Power failure countermeasure	The setting data is backed up in the non-volatile IC memory.
	Self-diagnosis	The CPU is monitored by a watchdog timer, and if an abnormal status occurs, the controller is switched to warm-up status.
	Automatic cold junction tempera-ture compensation	This detects the temperature at the connecting terminal between the thermocouple and the instrument, and always maintains it at the same status as if the reference junction location temperature was at 0℃ (32℉).
	Burnout	If the thermocouple or RTD input is burnt out, the PV Display flashes [ ], and the control output is turned OFF.
	Input error	**Contents, Indication** / **Control Output** Overscale: If PV has exceeded the Indication range high limit value, [ ] flashes. — OFF Undersacle: If PV has dropped below the Indication range low limit, value, [ ] flashes. — OFF **Input** / **Input Range** / **Indication Range** / **Control Range** K / 0 to 400℃ / -50 to 450℃ / -50 to 450℃ J / 0 to 400℃ / -50 to 450℃ / -50 to 450℃ Pt100 / 0 to 100℃ / -50 to 150℃ / -50 to 150℃
	Warm-up indication	Sensor input characters and temperature unit [K: K.C, J: J.C, Pt100: PtC] are indicated on the PV Display for approx. 3 seconds after power-on.
Other	Power consumption	Approx. 5 VA
	Ambient temperature	0 to 50℃
	Ambient humidity	35 to 85 %RH (non-condensing)
	Weight	Approx. 370 g
	Accessories included	Mounting brackets: 1 set, Instruction manual: 1 copy

9. Troubleshooting

If any malfunctions occur, refer to the following items after checking that power is being supplied to the controller.

Problem	Controller Status		Possible Cause and Solution
	PV Display	ON/OFF/ALARM Indicator	
Temperature does not rise.	Indication is unstable.	The OFF Indicator lights.	• Disconnection of thermocouple, compensating lead wire or RTD • Imperfect connection at the input terminal section
	Indicates a value around room temperature.	The ON Indicator lights.	• Burnout or imperfect connection of heater • Malfunction of the control equipment such as electromagnetic switch, SSR. • Fuse burnout
	No indication	The ON or OFF Indicator does not light.	• Burnout or imperfect connection at the power circuit • Specified voltage has not been applied.
	Indicates the negative value or a value around room temperature.	The ON Indicator lights.	• Thermocouple or RTD is shorted. • Improper mounting (insertion) of thermocouple, RTD • The polarity of thermocouple or compensating lead wire is reversed. • RTD specifications are not suitable.
Temperature rises too much.	A value greater than the SV is indicated.	The OFF Indicator lights.	• Malfunction of electromagnetic switch contact • Malfunction of control equipment such as SSR
The control is unstable.	The value on the PV Display fluctuates.	Flashes in fast cycles.	• There may be equipment that interferes with or makes noise near the controller. • AC leaks into the sensors. • Imperfect connection at the terminal section
The alarm output is not turned ON.	Indicates the range of alarm output ON.	The ALARM Indicator lights.	• The alarm output control circuit is broken.
		The ALARM Indicator turns off.	• The Alarm Type is not properly specified. • The Alarm Value is not set properly.

***** Inquiry *****

For any inquiries about this unit, please contact our agency or the vendor where you purchased the unit after checking the following.

[Example]

- Model ---------- ACN-210-R/E
- Serial number ---------- No. 098F05000

In addition to the above, please let us know the details of the malfunction, or discrepancy, and the operating conditions.

SHINKO TECHNOS CO., LTD.

OVERSEAS DIVISION

Head Office : 2-5-1, Senbahigashi, Minoo, Osaka, Japan

URL: http://www.shinko-technos.co.jp/e/ Tel : +81-72-727-6100

E-mail: overseas@shinko-technos.co.jp Fax: +81-72-727-7006