Digital Indicating DO (Dissolved Oxygen) Meter

AER-102-DO

Instruction Manual

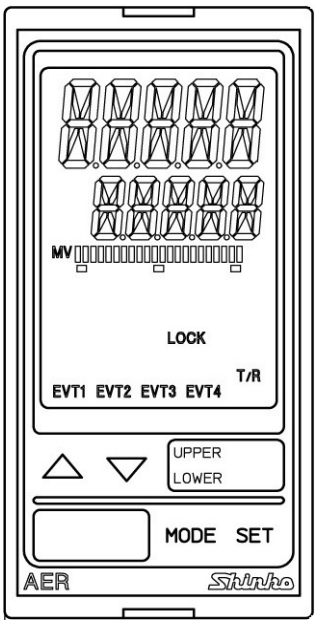

Shinko

Preface

Thank you for purchasing our AER-102-DO, Digital Indicating DO (Dissolved Oxygen) Meter. This manual contains instructions for the mounting, functions, operations and notes when operating the AER-102-DO. To ensure safe and correct use, thoroughly read and understand this manual before using the instrument.

To prevent accidents arising from the misuse of the instrument, please ensure the operator receives this manual.

⚠ Caution

- This instrument should be used in accordance with the specifications described in the manual. If it is not used according to the specifications, it may malfunction or cause a fire.
- Be sure to follow all of the warnings, cautions and notices. If they are not observed, serious injury or malfunction may occur.
- The contents of this instruction manual are subject to change without notice.
- Care has been taken to ensure that the contents of this instruction manual are correct, but if there are any doubts, mistakes or questions, please inform our sales department.
- This instrument is designed to be installed through a control panel. If it is not, measures must be taken to ensure that the operator cannot touch power terminals or other high voltage sections.
- Any unauthorized transfer or copying of this document, in part or in whole, is prohibited.
- Shinko Technos Co., Ltd. is not liable for any damage or secondary damage(s) incurred as a result of using this product, including any indirect damage.

Safety Precautions (Be sure to read these precautions before using our products.)

The safety precautions are classified into 2 categories: “Warning” and “Caution”.
Depending on the circumstances, procedures indicated by ⚠ Caution may result in serious consequences, so be sure to follow the directions for usage.

⚠ Warning Procedures which may lead to dangerous conditions and cause death or serious injury, if not carried out properly.

⚠ Caution Procedures which may lead to dangerous conditions and cause superficial to medium injury or physical damage or may degrade or damage the product, if not carried out properly.

⚠ Warning

- To prevent an electrical shock or fire, only Shinko or other qualified service personnel may handle the inner assembly.
- To prevent an electrical shock, fire or damage to the instrument, parts replacement may only be undertaken by Shinko or other qualified service personnel.

⚠ SAFETY PRECAUTIONS

- To ensure safe and correct use, thoroughly read and understand this manual before using this instrument.
- This instrument is intended to be used for measuring equipment. Verify correct usage after purpose-of-use consultation with our agency or main office. (Never use this instrument for medical purposes with which human lives are involved.)
- External protection devices such as protective equipment against excessive temperature rise, etc. must be installed, as malfunction of this product could result in serious damage to the system or injury to personnel. Proper periodic maintenance is also required.
- This instrument must be used under the conditions and environment described in this manual. Shinko Technos Co., Ltd. does not accept liability for any injury, loss of life or damage occurring due to the instrument being used under conditions not otherwise stated in this manual.

⚠ Caution with Respect to Export Trade Control Ordinance

To avoid this instrument from being used as a component in, or as being utilized in the manufacture of weapons of mass destruction (i.e. military applications, military equipment, etc.), please investigate the end users and the final use of this instrument. In the case of resale, ensure that this instrument is not illegally exported.

1. Installation Precautions

⚠ Caution

This instrument is intended to be used under the following environmental conditions (IEC61010-1): Overvoltage category Ⅱ, Pollution degree 2
Ensure the mounting location corresponds to the following conditions:

- A minimum of dust, and an absence of corrosive gases
- No flammable, explosive gases
- No mechanical vibrations or shocks
- No exposure to direct sunlight, an ambient temperature of 0 to 50℃ (32 to 122℉) that does not change rapidly, and no icing
- An ambient non-condensing humidity of 35 to 85 %RH
- No large capacity electromagnetic switches or cables through which large current is flowing.
- No water, oil, chemicals or the vapors of these substances can come into direct contact with the unit.
- If the AER-102-DO is mounted through the face of a control panel, the ambient temperature of the unit – not the ambient temperature of the control panel – must be kept under 50℃. Otherwise the life of electronic parts (especially electrolytic capacitors) of the unit will be shortened.

Note: Do not install this instrument on or near flammable material even though the case of this instrument is made of flame-resistant resin.

2. Wiring Precautions

⚠ Caution

- Do not leave wire remnants in the instrument, as they could cause a fire or a malfunction.
- Use a solderless terminal with an insulation sleeve in which the M3 screw fits when wiring the AER-102-DO.
- The terminal block of this instrument is designed to be wired from the left side. The lead wire must be inserted from the left side of the terminal, and fastened with the terminal screw.
- Tighten the terminal screw using the specified torque. If excessive force is applied to the screw when tightening, the terminal screw may be damaged.
- This instrument does not have a built-in power switch, circuit breaker and fuse. It is necessary to install a power switch, circuit breaker and fuse near the instrument. (Recommended fuse: Time-lag fuse, rated voltage 250 V AC, rated current 2 A)
- For a 24 V AC/DC power source, do not confuse polarity when using direct current (DC).
- Be sure to connect the ground terminal to earth for safety (D-class grounding). Keep the grounding of this unit separate from other electrical devices, such as motors.
- Do not apply a commercial power source to the sensor which is connected to the input terminal nor allow the power source to come into contact with the sensor.
- Use the DO Sensor made by OPTEX Co., Ltd.
- Keep the input wires and power lines separate.

Note about the DO Sensor Cable

The DO Sensor cable is a highly-insulated (electrical) cable. Please handle it with utmost care as follows.

- Do not allow terminals and socket of the DO Sensor cable to come in contact with moisture or oil of any kind. Likewise, ensure fingers are clean, otherwise the insulation will deteriorate, resulting in unstable indication.
  Be sure to keep the cable dry and clean at all times.
  If the cable is stained, clean it with alcohol, and dry it completely.
- For calibration or checking/replacement, the DO Sensor cable should be wired with sufficient length.
- Keep the DO Sensor cable and junction cable away from electrical devices, such as motors or their power lines from which inductive interference emanates.

Connection

The DO Sensor cable has the following terminals.

Code	Terminal
RS-485 (SENSOR INPUT)	DO Sensor YB (+) input terminal (Blue)
RS-485 (SENSOR INPUT)	DO Sensor YA (-) input terminal (Green)
POWER FOR SENSOR	External power (+) terminal (Red)
POWER FOR SENSOR	External power (-) terminal (Black) and DO Sensor shield

White and brown cables of the DO Sensor are not used, so cut them off, and electrically insulate them.
If they come in contact with other terminals, a malfunction will occur.

3. Operation and Maintenance Precautions

⚠ Caution

- Do not touch live terminals. This may cause an electrical shock or problems in operation.
- Turn the power supply to the instrument OFF when retightening the terminal or cleaning.
  Working on or touching the terminal with the power switched ON may result in severe injury or death due to electrical shock.
- Use a soft, dry cloth when cleaning the instrument.
  (Alcohol based substances may tarnish or deface the unit.)
- As the display section is vulnerable, be careful not to put pressure on, scratch or strike it with a hard object.

Abbreviations used in this manual

Name	Term
DO	Dissolved Oxygen
Display Mode	DO Concentration/Temperature Display Mode DO % Saturation/Temperature Display Mode Oxygen Partial Pressure/Temperature Display Mode

Characters Used in This Manual

Indication	-1	0	1	2	3	4	5	6	7	8	9	℃	℉
Number, ℃/℉	-1	0	1	2	3	4	5	6	7	8	9	℃	℉
Indication	A	b	c	d	E	F	G	H	I	J	K	L	M
Alphabet	A	B	C	D	E	F	G	H	I	J	K	L	M
Indication	N	o	P	Q	R	S	T	U	V	W	X	Y	Z
Alphabet	N	O	P	Q	R	S	T	U	V	W	X	Y	Z

Contents

Page

1. Model 8
   1.1 Model 8
   1.2 How to Read the Model Label 8
2. Names and Functions of Instrument 9
3. Mounting AER-102-DO and DO Sensor 10
   3.1 Site Selection 10
   3.2 External Dimensions (Scale: mm) 10
   3.3 Panel Cutout (Scale: mm) 11
   3.4 Mounting and Removal 12
   3.5 DO Sensor 13
      3.5.1 Contents of Package 13
      3.5.2 Caution when Using DO Sensor 13
      3.5.3 Name of Sections 14
      3.5.4 Attaching the Sensor Cap 15
      3.5.5 Installing the DO Sensor 16
      3.5.6 Extending DO Sensor Cable 18
4. Wiring 19
   4.1 Lead Wire Solderless Terminal 20
   4.2 Terminal Arrangement 21
   4.3 Wiring Example 23
5. Outline of Key Operation and Setting Groups 24
   5.1 Outline of Key Operation 24
   5.2 Setting Groups 24
6. Setup 26
   6.1 Turn the Power Supply to the AER-102-DO ON. 26
   6.2 DO Concentration Input Group 27
   6.3 Transmission Output 1 Group 28
   6.4 Transmission Output 2 Group 30
   6.5 EVT1 Action Group 32
   6.6 EVT2 Action Group 40
   6.7 EVT3 Action Group 40
   6.8 EVT4 Action Group 40
   6.9 Communication Group 41
   6.10 Cleansing Group 43
   6.11 Basic Function Group 44
   6.12 Self-Check Group 49
   6.13 Data Clear Group 53
7. Calibration 54
   7.1 DO Concentration Calibration 54
      7.1.1 Preparation 54
      7.1.2 DO Concentration 1-point Calibration Mode 55
      7.1.3 DO Concentration 2-point Calibration Mode 57
      7.1.4 Concentration Option Calibration Mode 60
   7.2 Transmission Output 1 Adjustment Mode 62
   7.3 Transmission Output 2 Adjustment Mode 63

8. Measurement 65
8.1 Starting Measurement 65
8.2 Outside Measurement Range 65
8.3 Errors 66
8.4 About Transmission Output 1 and Transmission Output 2 66
8.5 Self-Check Output 67
8.6 EVT1 to EVT4 Outputs 68
8.7 Sensor Cap Replacement Timer Output 71
8.8 Cleansing Output 72
8.9 Forced Cleansing Mode 73
9. Specifications 74
9.1 Specifications 74
9.1.1 Standard Specifications 74
9.1.2 Optional Specifications 81
9.2 DO Sensor Specifications 82
10. Troubleshooting 83
10.1 Indication 83
10.2 Key Operation 84
11. Character Tables 85
11.1 Setting Group List 85
11.2 DO Concentration Calibration 85
11.3 Transmission output 1 Adjustment Mode 86
11.4 Transmission output 2 Adjustment Mode 86
11.5 DO Concentration Input Group 86
11.6 Transmission Output 1 Group 87
11.7 Transmission Output 2 Group 88
11.8 EVT1 Action Group 89
11.9 EVT2 Action Group 92
11.10 EVT3 Action Group 95
11.11 EVT4 Action Group 98
11.12 Communication Group 101
11.13 Cleansing Group 101
11.14 Basic Function Group 102
11.15 Self-Check Group 103
11.16 Data Clear Group 104
11.17 Error Codes 104
12. Key Operation Flowchart 106
13 Maintenance 110
13.1 Maintenance 110
13.2 Periodic Inspection 110
13.3 Replacement of Consumables (Maintenance Parts) 110
13.4 Calibration 110
13.5 Long-Term Storage 110
14. Reference Chart 111

1. Model

1.1 Model

A E R - 1 0	2-	DO		, □□□	
Input points	2				2 points
Input		DO			Optical DO Sensor
Power supply voltage					100 to 240 V AC (standard)
			1		24 V AC/DC (*)
Option				C5	Serial communication RS-485
				EVT3	EVT3, EVT4 outputs (Contact output 3, 4)

(*) Power supply voltage 100 to 240 V AC is standard.
When ordering 24 V AC/DC, enter “1” in Power supply voltage, after ‘DO’.

1.2 How to Read the Model Label

The model label is attached to the left side of the case.

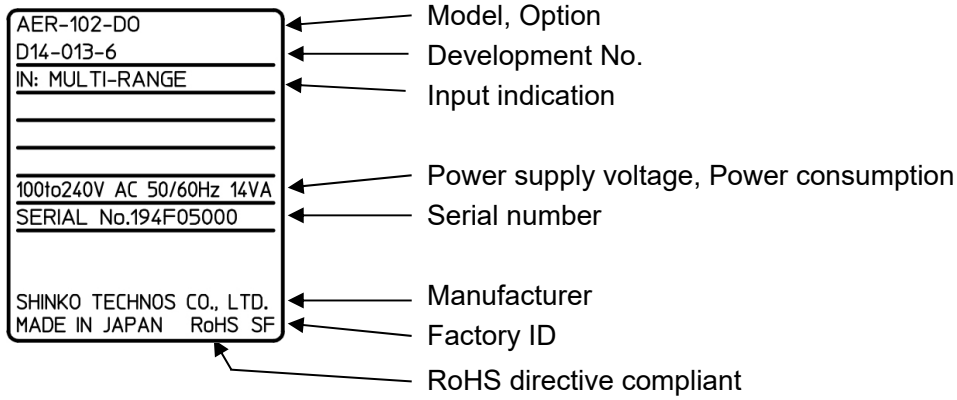

(Fig. 1.2-1)

2. Names and Functions of Instrument

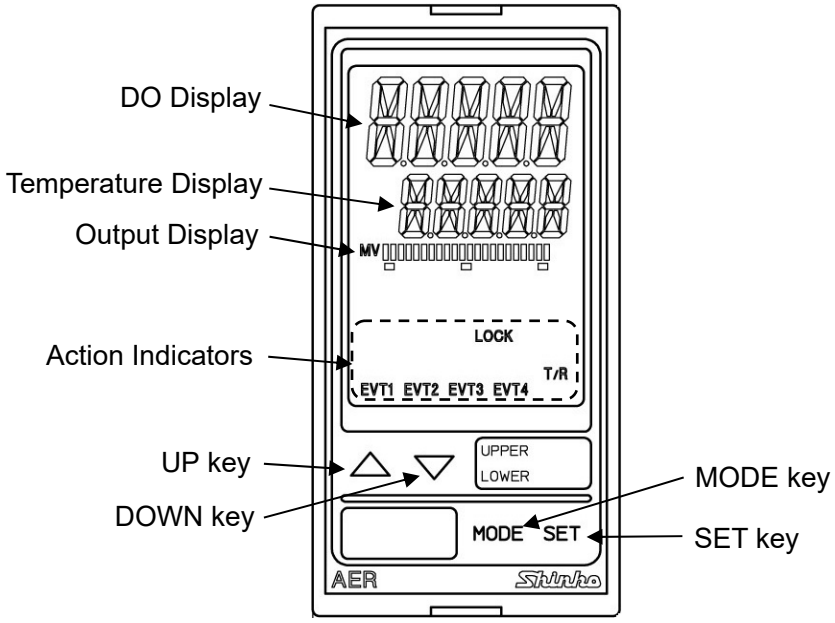

(Fig. 2-1)

Displays

DO Display	DO Concentration or characters in setting mode are indicated in red/green/orange. Indications differ depending on the selections in [Backlight selection (p.44)] and [DO color (p.45)].
Temperature Display	Temperature or values in setting mode are indicated in green. Indications differ depending on the selections in [Backlight selection (p.44)].
Output Display	Backlight Green The bar graph is lit corresponding to the transmission output. Indications differ depending on the selections in [Bar graph indication (p.46)].

Action Indicators: Backlight orange

EVT1	Lit when EVT1 output (Contact output 1) is ON.
EVT2	Lit when EVT2 output (Contact output 2) is ON.
EVT3	Lit when EVT3 output (Contact output 3) (EVT3 option) is ON.
EVT4	Lit when EVT4 output (Contact output 4) (EVT3 option) is ON.
T/R	Lit during Serial communication (C5 option) TX output (transmitting).
LOCK	Lit when Lock 1, 2 or 3 is selected.

Keys

△ UP key	Increases the numeric value.
▽ DOWN key	Decreases the numeric value.
MODE MODE key	Selects a group.
SET SET key	Switches the setting modes, and registers the set value.

3. Mounting AER-102-DO and DO Sensor

3.1 Site Selection

> **⚠ Caution**
>
> Use within the following temperature and humidity ranges:
> Temperature: 0 to 50℃ (32 to 122℉) (No icing)
> Humidity: 35 to 85 %RH (Non-condensing)
> If AER-102-DO is mounted through the face of a control panel, the ambient temperature of the unit – not the ambient temperature of the control panel – must be kept under 50℃, otherwise the life of electronic parts (especially electrolytic capacitors) of the unit will be shortened.

This instrument is intended to be used under the following environmental conditions (IEC61010-1): Overvoltage category Ⅱ, Pollution degree 2

Ensure the mounting location corresponds to the following conditions:

- A minimum of dust, and an absence of corrosive gases
- No flammable, explosive gases
- No mechanical vibrations or shocks
- No exposure to direct sunlight, an ambient temperature of 0 to 50℃ (32 to 122℉) that does not change rapidly
- An ambient non-condensing humidity of 35 to 85 %RH
- No large capacity electromagnetic switches or cables through which large current is flowing
- No water, oil, chemicals or the vapors of these substances can come into direct contact with the unit.

3.2 External Dimensions (Scale: mm)

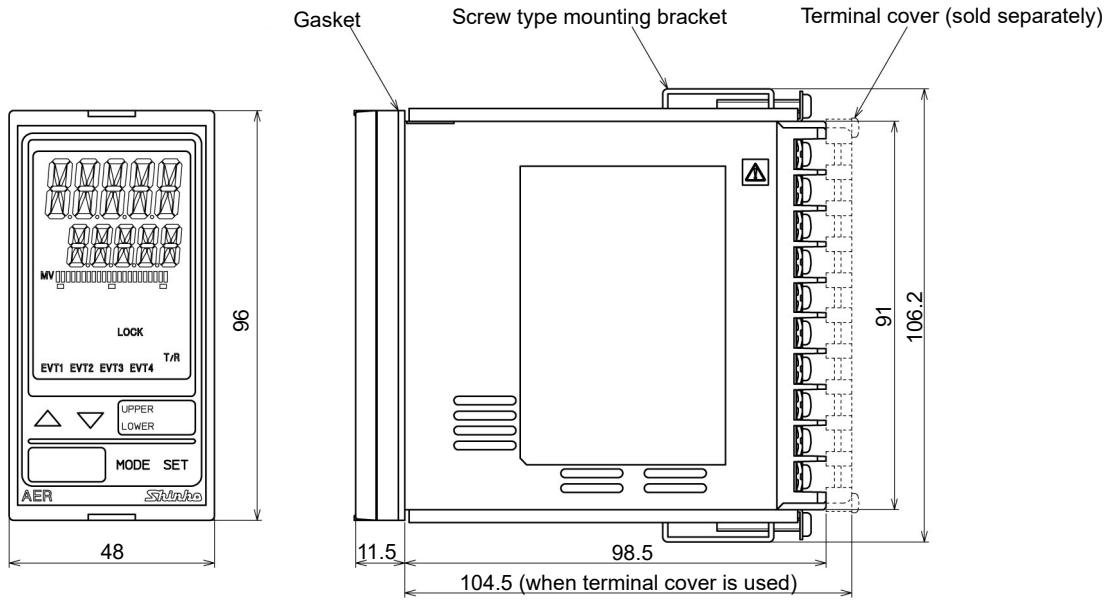

(Fig. 3.2-1)

3.3 Panel Cutout (Scale: mm)

⚠ Caution

If horizontal close mounting is used for the unit, IP66 specification (Drip-proof/ Dust-proof) may be compromised, and all warranties will be invalidated.

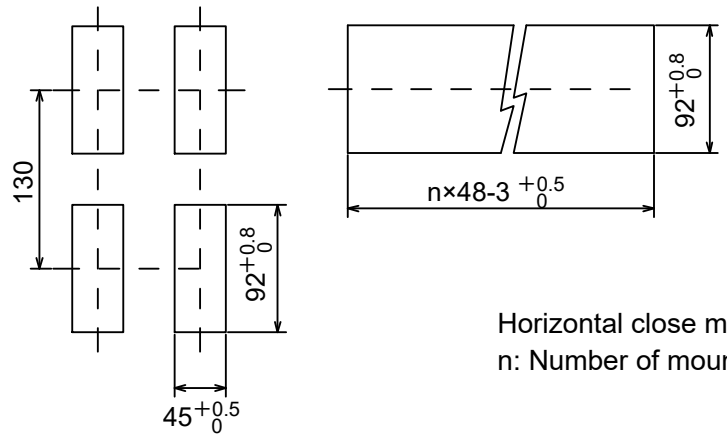

Horizontal close mounting
n: Number of mounted units

(Fig. 3.3-1)

3.4 Mounting and Removal

⚠ Caution

As the case is made of resin, do not use excessive force while screwing in the mounting bracket, or the case or mounting brackets could be damaged. The tightening torque should be 0.12 N•m.

How to mount the unit

Mount the unit vertically to the flat, rigid panel to ensure it adheres to the Drip-proof/ Dust-proof specification (IP66).

Mountable panel thickness: 1 to 8 mm

(1) Insert the unit from the front side of the panel.

(2) Attach the mounting brackets by the holes at the top and bottom of the case, and secure the unit in place with the screws.

How to remove the unit

(1) Turn the power to the unit OFF, and disconnect all wires before removing the unit.

(2) Loosen the screws of the mounting brackets, and remove the mounting brackets.

(3) Pull the unit out from the front of the panel.

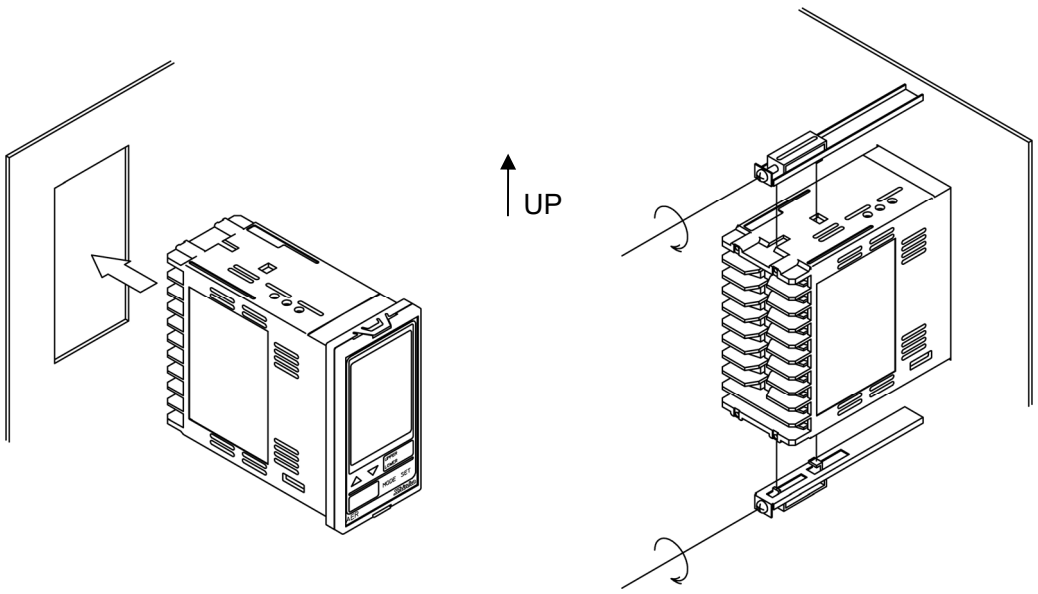

(Fig. 3.4-1)

3.5 DO Sensor

3.5.1 Contents of Package

The following items are contained in the DO Sensor package.

DO Sensor (DOS-20)

Sensor cap (DOS-CP)

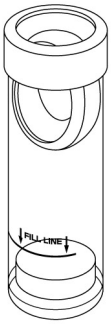

Calibration container

(Fig. 3.5.1-1)

3.5.2 Caution when Using DO Sensor

⚠ Caution

Do not use the DO Sensor for any purposes other than water quality measurement.

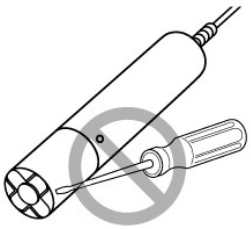 (Fig. 3.5.2-1)	Do not disassemble or modify. The sensor contains a high voltage component which may cause fire or electrical shock. For internal inspection, maintenance or repair, please consult us or our agency.
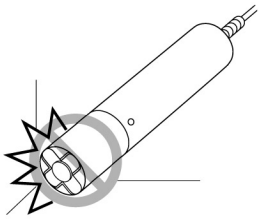 (Fig. 3.5.2-2)	Do not subject the sensor to any rough treatment. Do not drop the unit. Handle with care.
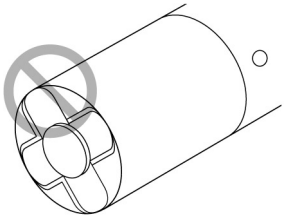 (Fig. 3.5.2-3)	Do not touch the measurement section. If it is not clean, wipe it with a clean, soft cloth.

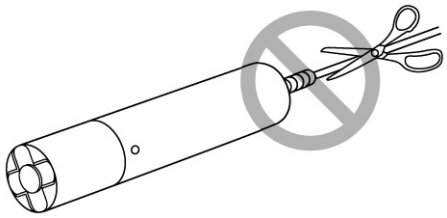 (Fig. 3.5.2-4)	Be careful not to damage the cable. Ensure that the cable is not tangled, nor caught or trapped in any way when installing and using the sensor. Use a spiral cable wrap to protect the cable. If the cable is damaged, it may malfunction when immersed, and fire or electrical shock will occur.

3.5.3 Name of Sections

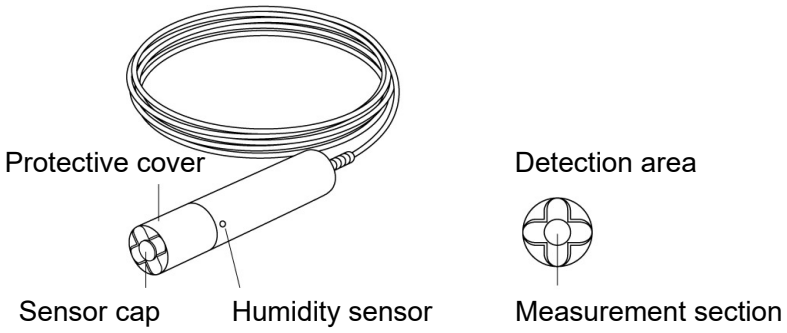

(Fig. 3.5.3-1)

3.5.4 Attaching the Sensor Cap

⚠ Caution

- Before attaching, make sure that the O-ring of the sensor is not crooked or is in the right position in the groove.
- Take the sensor cap out from the package just before mounting, and mount it immediately.
- When mounting the sensor cap, keep the dust or water from entering into the cap.
  Otherwise correct measurement will not be performed.
- Date of manufacture is written on the storage case of sensor cap as the right diagram.

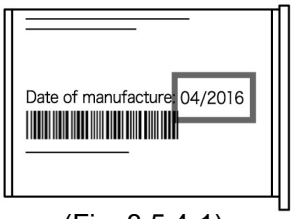

(Fig. 3.5.4-1)

(1) Remove the protective cover from the sensor by rotating it, then remove the red protective cap. Please carefully set aside the protective cap.

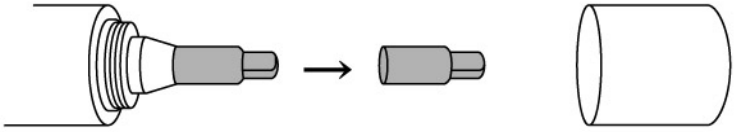

Protective cap Protective cover

(Fig. 3.5.4-2)

(2) Take the provided sensor cap out from the storage case.

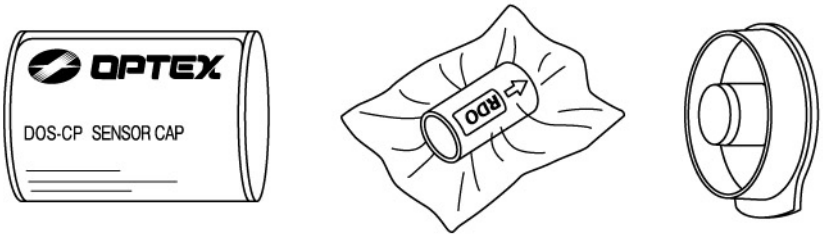

(Fig. 3.5.4-3)

(3) Match the arrows on the sensor cap and on the sensor, then push the sensor cap straight onto it until no gap is visible.

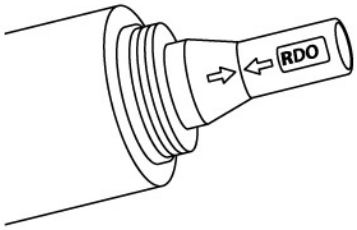

(Fig. 3.5.4-4)

(4) Reattach the protective cover.

3.5.5 Installing the DO Sensor

⚠ Caution

Before installation, remove the power supply cable from the power source. After completion, wire the power supply cable.

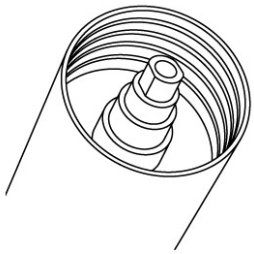 (Fig. 3.5.5-1)	The end of DO Sensor cable is equipped with a female screw (1¼-11 ½NPT) to enable a male screw to be attached to a severed pipe. NPT stands for National Pipe Thread Taper (which is a U.S. standard for tapered threads used on threaded pipes and fittings).
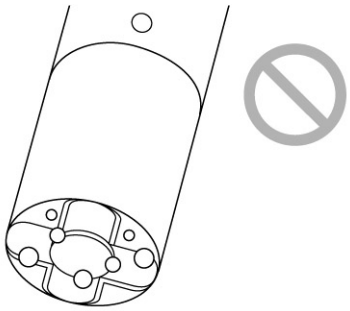 (Fig. 3.5.5-2)	When installing the DO Sensor, make sure that air bubbles are not present on and near the detection surface. If air bubbles accumulate in the measurement section area, correct measurement cannot be obtained.
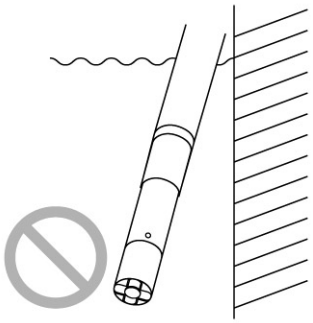 (Fig. 3.5.5-3)	Do not install the DO Sensor near to any walls or where water collects. Correct dissolved oxygen in the tank (for measurement) cannot be measured.
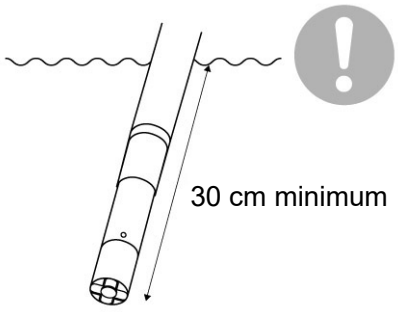 (Fig. 3.5.5-4)	Install the DO Sensor at a minimum of about 30 cm below the lowest water surface, taking water level changes into consideration.

Recommendations

- As an accessory, the attachment (DA-1), sold separately, is recommended to use in a place where water currents are fast.
- The following (1) to (4) are included in the immersion holder.
- The Polyvinyl chloride (PVC) pipe (VP-40) is to be supplied by the user.

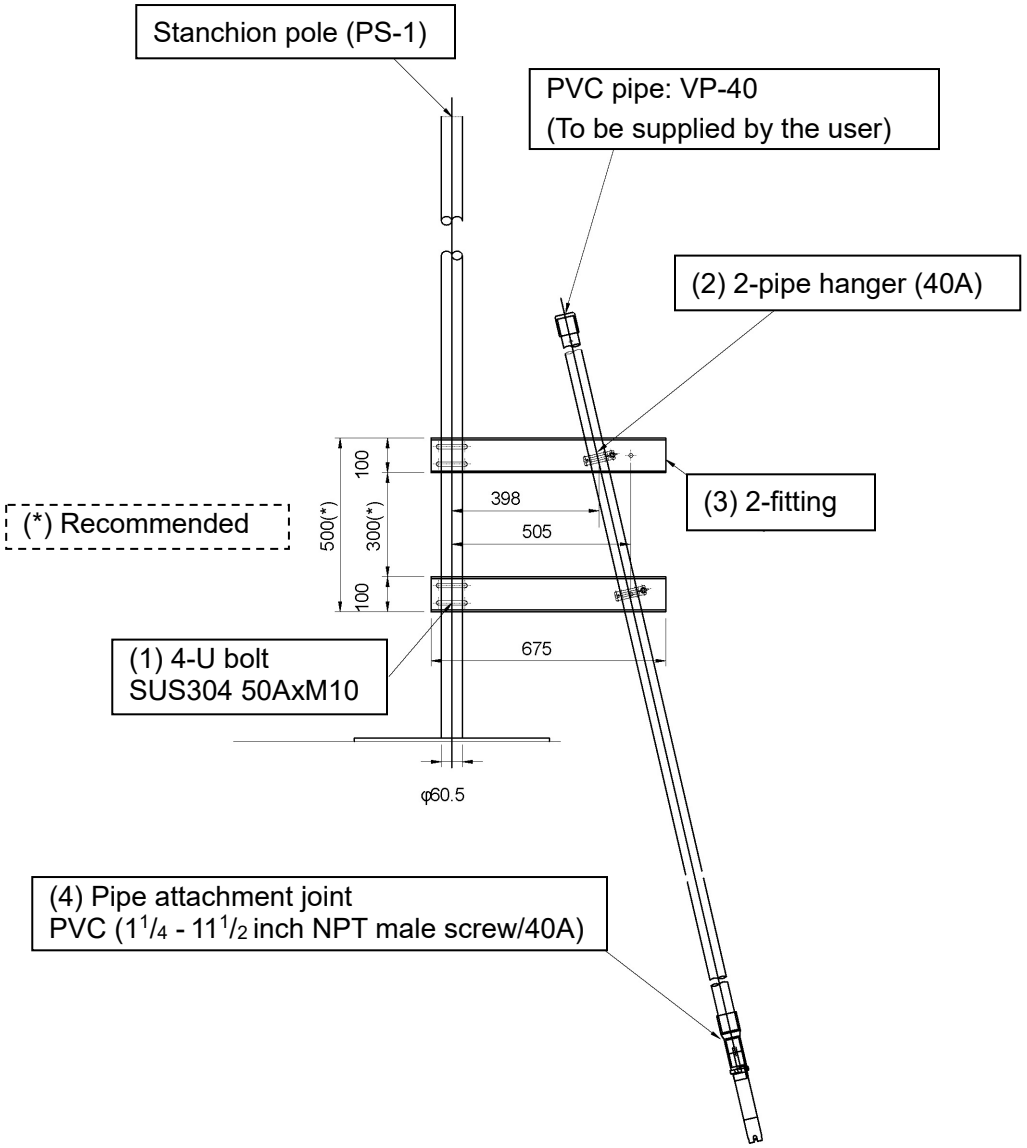

(Fig. 3.5.5-5)

3.5.6 Extending DO Sensor Cable

DO Sensor cable standard length is 10 m.

To extend the cable, refer to the following diagram.

Use a device such as a pull box if necessary.

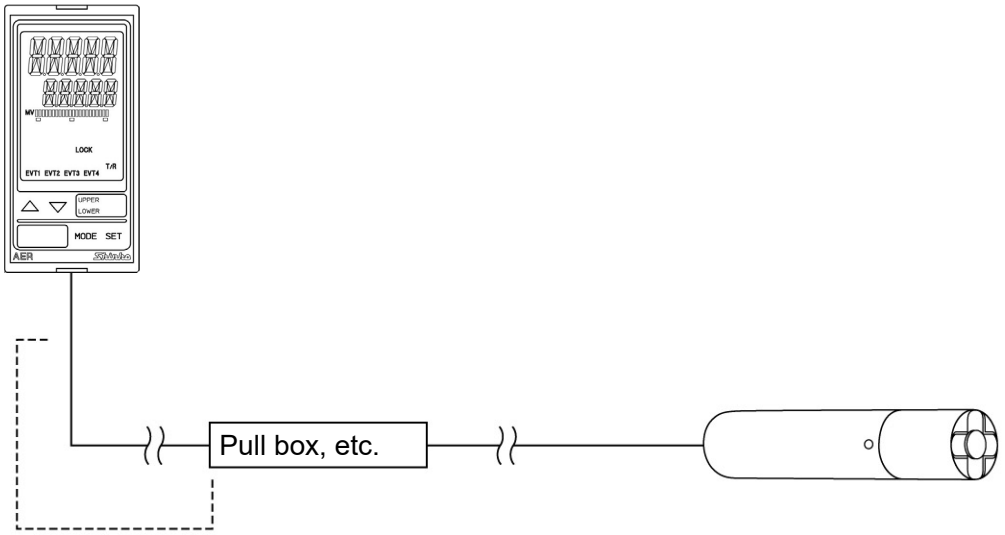

Extendable cable length: 1200 m (Nominal cross-section area: 0.2 to 1.25 mm^2)

(Fig. 3.5.6-1)

4. Wiring

⚠ Warning

Turn the power supply to the instrument off before wiring or checking. Working on or touching the terminal with the power switched on may result in severe injury or death due to electrical shock.

⚠ Caution

- Do not leave wire remnants in the instrument, as they could cause a fire or a malfunction.
- Use a solderless terminal with an insulation sleeve in which the M3 screw fits when wiring the AER-102-DO.
- The terminal block of this instrument is designed to be wired from the left side. The lead wire must be inserted from the left side of the terminal, and fastened with the terminal screw.
- Tighten the terminal screw using the specified torque. If excessive force is applied to the screw when tightening, the terminal screw may be damaged.
- This instrument does not have a built-in power switch, circuit breaker and fuse. It is necessary to install a power switch, circuit breaker and fuse near the instrument. (Recommended fuse: Time-lag fuse, rated voltage 250 V AC, rated current 2 A)
- For a 24 V AC/DC power source, do not confuse polarity when using direct current (DC).
- Be sure to connect the ground terminal to earth for safety (D-class grounding). Keep the grounding of this unit separate from other electrical devices, such as motors.
- Do not apply a commercial power source to the sensor which is connected to the input terminal nor allow the power source to come into contact with the sensor.
- Use the DO Sensor in accordance with the sensor input specifications of this unit.
- Keep the input wires and power lines separate.

⚠ Caution

Note about the DO Sensor Cable

The DO Sensor cable is a highly-insulated (electrical) cable. Please handle it with utmost care as follows.

- Do not allow terminals and socket of the DO Sensor cable to come in contact with moisture or oil of any kind. Likewise, ensure fingers are clean, otherwise the insulation will deteriorate, resulting in unstable indication.
  Be sure to keep the cable dry and clean at all times.
  If the cable is stained, clean it with alcohol, and dry it completely.
- For calibration or checking/replacement, the DO Sensor cable should be wired with sufficient length.
- Keep the DO Sensor cable and junction cable away from electrical devices, such as motors or their power lines from which inductive interference emanates.

Connection

The DO Sensor cable has the following terminals.

Code	Terminal
RS-485 (SENSOR INPUT)	DO Sensor YB (+) input terminal (Blue)
RS-485 (SENSOR INPUT)	DO Sensor YA (-) input terminal (Green)
POWER FOR SENSOR	External power (+) terminal (Red)
POWER FOR SENSOR	External power (-) terminal (Black) and DO Sensor shield

The white and brown wires of the DO Sensor are not used. Cut them off and electrically insulate them.
If they come in contact with other terminals, a malfunction will occur.

4.1 Lead Wire Solderless Terminal

Use a solderless terminal with an insulation sleeve in which an M3 screw fits as follows. The tightening torque should be 0.63 N•m.

Solderless Terminal	Manufacturer	Model	Tightening Torque
Y-type	Nichifu Terminal Industries CO.,LTD.	TMEV1.25Y-3	0.63 N•m
	Japan Solderless Terminal MFG CO.,LTD.	VD1.25-B3A	
Ring-type	Nichifu Terminal Industries CO.,LTD.	TMEV1.25-3	
	Japan Solderless Terminal MFG CO.,LTD.	V1.25-3	

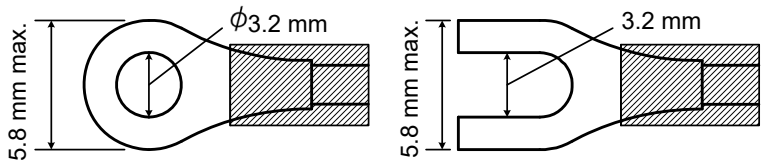

(Fig. 4.1-1)

4.2 Terminal Arrangement

Standard specification

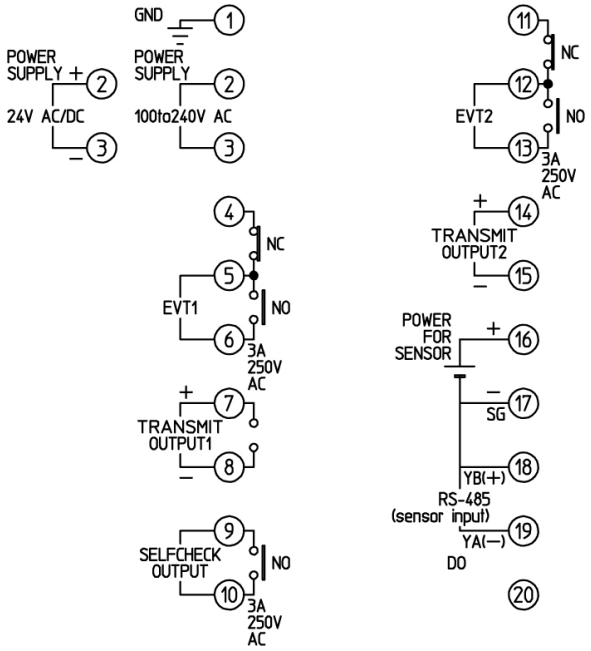

(Fig. 4.2-1)

EVT3 option

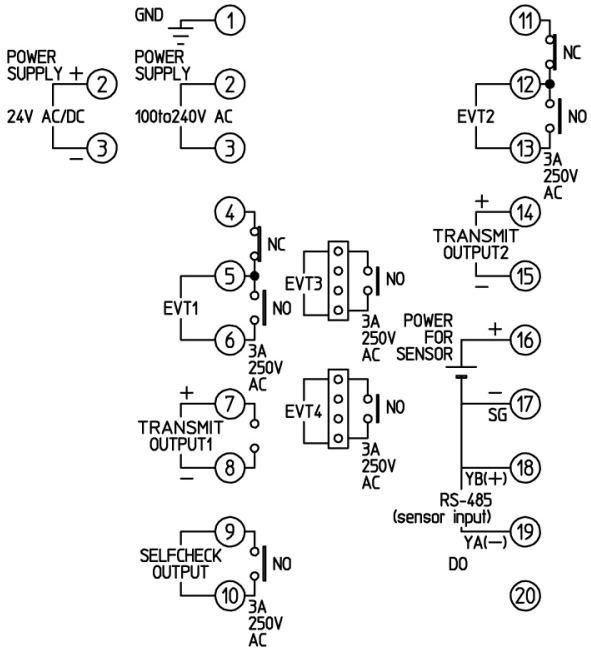

(Fig. 4.2-2)

C5 option

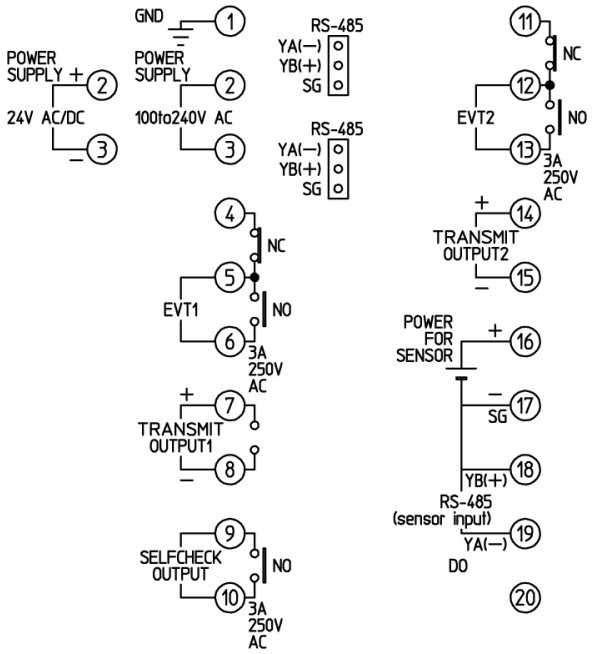

(Fig. 4.2-3)

C5, EVT3 options

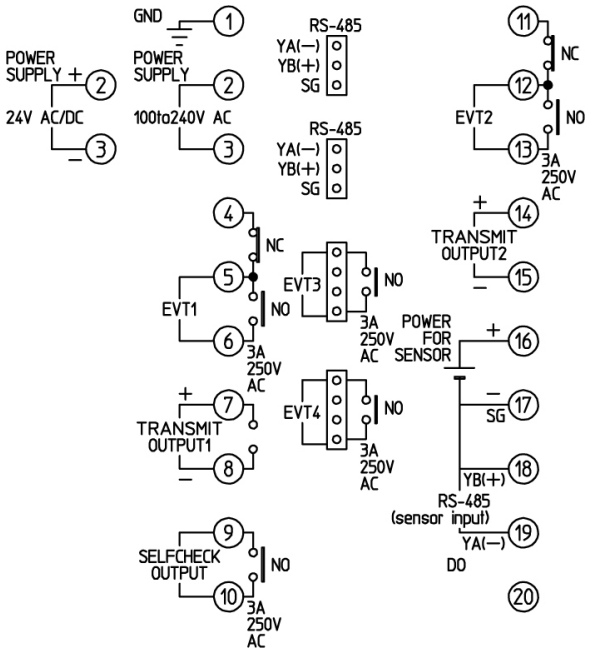

(Fig. 4.2-4)

Code	Description
GND	Ground
POWER SUPPLY	Power supply 100 to 240 V AC or 24 V AC/DC (when 1 is added after the model name DO) F**or 24 V DC, ensure polarity is correct.**
EVT1	EVT1 output (Contact output 1)
EVT2	EVT2 output (Contact output 2)
TRANSMIT OUTPUT1	Transmission output 1
TRANSMIT OUTPUT2	Transmission output 2
SELFCHECK OUTPUT	Self-check output (Contact output)
DO POWER FOR SENSOR	External power supply (+) terminal (Red)
DO POWER FOR SENSOR	External power supply (-) terminal and DO Sensor shield (Black)
DO RS-485(sensor input)	DO Sensor YB(+) input terminal (Blue)
DO RS-485(sensor input)	DO Sensor YA(-) input terminal (Green)
RS-485	Serial communication RS-485 (C5 option) 2 connectors are wired internally. Use the included wire harnesses C5J and C0J.
EVT3	EVT3 output (Contact output 3) (EVT3 option) Use the included wire harnesses HBJ.
EVT4	EVT4 output (Contact output 4) (EVT3 option) Use the included wire harnesses HBJ.

4.3 Wiring Example

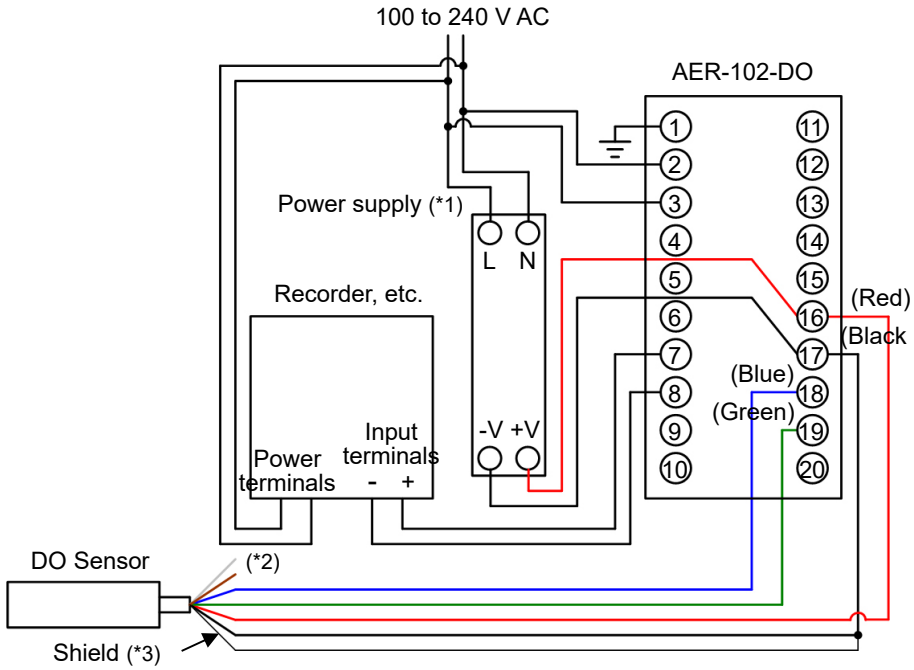

(*1) Power supply (12 to 36 V DC) is supplied by the user.

(*2) White and brown cables of the DO Sensor are not used, so cut them off, and electrically insulate them. If they come in contact with other terminals, a malfunction will occur.

(*3) Electrically insulate the DO Sensor shield, and connect the shield and black wire to (-) terminal of external power supply.

(Fig. 4.3-1)

5. Outline of Key Operation and Setting Groups

5.1 Outline of Key Operation

Key operation is used in Group Selection Mode in which setting items are divided into groups.

To enter Group Selection Mode, press the MODE key in Display Mode or Cleansing Output Mode.

Select a group with the MODE key, and press the SET key. The unit enters each setting item.

To set each item, use the △ or ▽ key, and register the set value with the SET key.

If the MODE key is held down for 3 seconds at any setting item, the unit will revert to Display Mode or Cleansing Output Mode.

5.2 Setting Groups

Setting groups are indicated on p.25.

[About each mode and setting items]

Setting group or setting item in shaded section will be displayed only when the corresponding option is ordered.

(*1) In Cleansing Output Mode, the measured value (DO concentration, DO % saturation, Oxygen partial pressure, Temperature) will be held during cleansing action (Cleansing time, Standby after cleansing).

(*2) If errors occur during 1st-point calibration (100% saturation calibration) while in 2-point calibration mode, press the MODE or SET key. The unit will revert to Display Mode or Cleansing Output Mode.

(*3) Depending on the selection in [Data clear Stop/Perform], the unit operates as follows.
If 'Data clear Stop' is selected, data will not be cleared. The unit will revert to the mode prior to Data clear Stop (either Display Mode or Cleansing Output Mode).
If 'Data clear Perform' is selected, data will be cleared. The unit will revert to the mode prior to Data clear Perform (either Display Mode or Cleansing Output Mode). (While data is being cleared, all indications are momentarily unlit.)

[About Key Operation]

- △, MODE, SET: Press the △, MODE or SET key. The unit will proceed to the next setting item, illustrated by an arrow.
- SET, MODE: Press the SET or MODE key until the desired setting mode appears.
- ▽ + MODE (3 sec): Press and hold the ▽ key and MODE key (in that order) together for approx. 3 seconds. The unit will proceed to DO concentration 1-point calibration mode.
- SET (3 sec), MODE (3 sec): Press the SET or MODE key for approx. 3 seconds. The unit will proceed to the next setting mode, illustrated by an arrow.
- △ + SET (3 sec): Press and hold the △ key and SET key (in that order) together for approx. 3 seconds. The unit will proceed to Transmission output 1 Zero adjustment mode.
- ▽ * SET (3 sec): Press and hold the ▽ key and SET key (in that order) together for approx. 3 seconds. The unit will proceed to Transmission output 2 Zero adjustment mode.

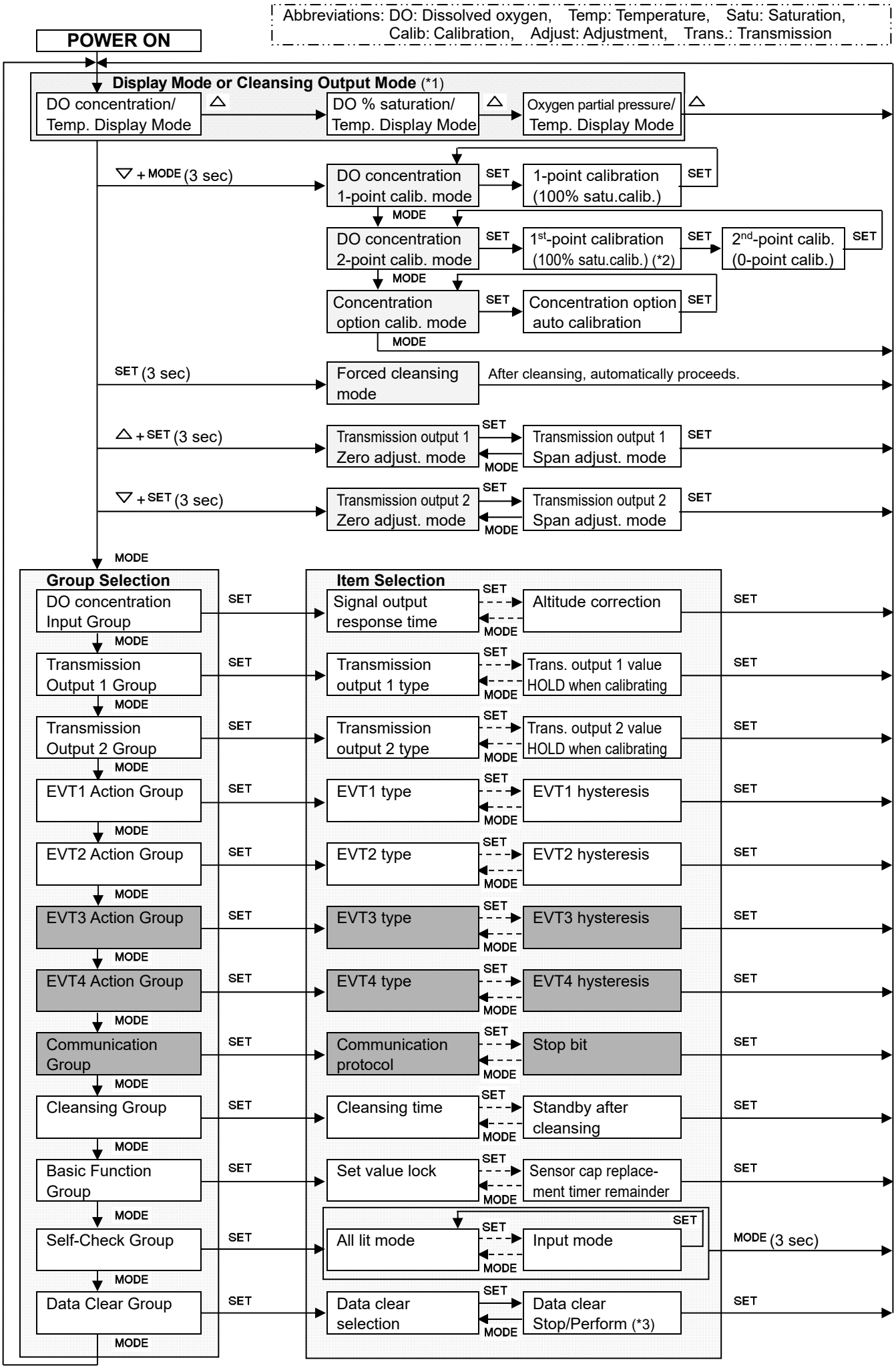
Abbreviations: DO: Dissolved oxygen, Temp: Temperature, Satu: Saturation,
Calib: Calibration, Adjust: Adjustment, Trans.: Transmission
POWER ON
Display Mode or Cleansing Output Mode (*1)
DO concentration/ Temp. Display Mode
DO % saturation/ Temp. Display Mode
Oxygen partial pressure/ Temp. Display Mode
▽ + MODE (3 sec)
DO concentration 1-point calib. mode
1-point calibration (100% satu.calib.)
DO concentration 2-point calib. mode
1st-point calibration (100% satu.calib.) (*2)
2nd-point calib. (0-point calib.)
Concentration option calib. mode
Concentration option auto calibration
SET (3 sec)
Forced cleansing mode
After cleansing, automatically proceeds.
△ + SET (3 sec)
Transmission output 1 Zero adjust. mode
Transmission output 1 Span adjust. mode
▽ + SET (3 sec)
Transmission output 2 Zero adjust. mode
Transmission output 2 Span adjust. mode
Group Selection
DO concentration Input Group
Transmission Output 1 Group
Transmission Output 2 Group
EVT1 Action Group
EVT2 Action Group
EVT3 Action Group
EVT4 Action Group
Communication Group
Cleansing Group
Basic Function Group
Self-Check Group
Data Clear Group
Item Selection
Signal output response time
Altitude correction
Transmission output 1 type
Trans. output 1 value HOLD when calibrating
Transmission output 2 type
Trans. output 2 value HOLD when calibrating
EVT1 type
EVT1 hysteresis
EVT2 type
EVT2 hysteresis
EVT3 type
EVT3 hysteresis
EVT4 type
EVT4 hysteresis
Communication protocol
Stop bit
Cleansing time
Standby after cleansing
Set value lock
Sensor cap replace-ment timer remainder
All lit mode
Input mode
MODE (3 sec)
Data clear selection
Data clear Stop/Perform (*3)
SET
MODE

6. Setup

Setup should be done before using this instrument according to the user's conditions:
Setting the DO concentration input, Transmission output 1, Transmission output 2, EVT1, EVT2, EVT3 (EVT3 option) and EVT4 (EVT3 option) types, Communication (C5 option), Cleansing and Indication settings, etc.

Setup can be conducted in the groups below.
DO Concentration Input Group, Transmission Output 1 Group, Transmission Output 2 Group, EVT1, EVT2, EVT3, EVT4 Action Groups, Communication Group, Cleansing Group, Basic Function Group

If the user's specification is the same as the factory default value of the AER-102-DO, or if setup has already been completed, it is not necessary to set up the instrument.
Proceed to Chapter "7. Calibration (p.54)".

6.1 Turn the Power Supply to the AER-102-DO ON.

For approx. 8 seconds after the power is switched ON, the following characters are indicated on the DO Display and Temperature Display.

Display	Indication
DO Display	do□□□
Temperature Display	□□ 1.00 [Version number (e.g.) 1.00]

During this time, all outputs are in OFF status, and action indicators turns OFF.
After that, measurement starts, indicating the item selected in [Backlight selection (p.44)].
This status is called Display Mode or Cleansing Output Mode.

Switching Between Modes

Every time the △ key is pressed, modes progress as follows.

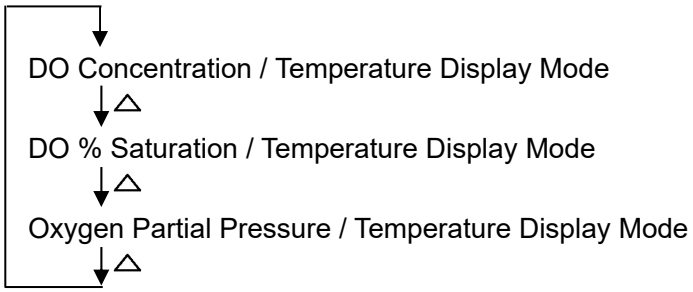

6.2 DO Concentration Input Group

To enter the DO Concentration Input Group, follow the procedure below.

① F.Nc□□ Press the MODE key in Display Mode or Cleansing Output Mode.

② dFcT□ Press the SET key.

The unit proceeds to the DO Concentration Input Group, and “Signal output response time” will appear.

Character	Setting Item, Function, Setting Range	Factory Default
dFcT□ □□□60	**Signal output response time** • Sets the signal output response time. Moving average is calculated from the set signal output response time, and the resulting value is updated every Data update cycle (5 seconds) as a measurement value. Moving average = Signal output response time ÷ Data update cycle (5 sec.) (e.g.) If signal output response time is set to 50 seconds, the Moving average will be: 50/5 = 10 (times) However, signal output response time setting will be invalidated during DO concentration calibration mode, Transmission output 1 or 2 adjustment mode. • Setting range: 5 to 600 seconds	60 seconds
SALT□ □□□0	**Salinity correction** • Sets the salinity concentration correction value. • Setting range: 0 to 42 PSU	0 PSU
ALTV □□□0	**Altitude correction** • Sets altitude. • Setting range: 0 to 5000 m	0 m

6.3 Transmission Output 1 Group

To enter Transmission Output 1 Group, follow the procedure below.

① TRo1 Press the MODE key twice in Display Mode or Cleansing Output Mode.

② TRo1 Press the SET key.
The unit enters Transmission Output 1 Group, and "Transmission output 1 type" will appear.

Character	Setting Item, Function, Setting Range	Factory Default
TRo1 do	**Transmission output 1 type**	DO concentration transmission
	• Selects Transmission output 1 type. • do : DO concentration transmission WTEMP : Water temperature transmission doSAT : DO % saturation transmission WPRES : Oxygen partial pressure transmission MV 1 : EVT1 MV transmission MV2 : EVT2 MV transmission MV3 : EVT3 MV transmission (*) MV4 : EVT4 MV transmission (*)	
TRLH1 20.00	**Transmission output 1 high limit**	20.00 mg/L
	• Sets Transmission output 1 high limit value. (This value correponds to 20 mA DC output.) If Transmission output 1 high limit and low limit are set to the same value, Transmission output 1 will be fixed at 4 mA DC. • Setting range: DO concentration transmission: Transmission output 1 low limit to 20.00 mg/L Water temperature transmission: Transmission output 1 low limit to 50.0℃ DO % saturation transmission: Transmission output 1 low limit to 200.0% Oxygen partial pressure transmission: Transmission output 1 low limit to 150.0 kPa EVT1 to EVT4 MV transmission: Transmission output 1 low limit to 100.0%	

(*) Available when EVT3, EVT4 outputs (EVT3 option) are/is ordered.

Character	Setting Item, Function, Setting Range	Factory Default
TRLL 1 □□0.00	**Transmission output 1 low limit** • Sets Transmission output 1 low limit value. (This value correponds to 4 mA DC output.) If Transmission output 1 high limit and low limit are set to the same value, Transmission output 1 will be fixed at 4 mA DC. • Setting range: DO concentration transmission: 0.00 mg/L to Transmission output 1 high limit Water temperature transmission: 0.0℃ to Transmission output 1 high limit DO % saturation transmission: 0.0% to Transmission output 1 high limit Oxygen partial pressure transmission: 0.0 kPa to Transmission output 1 high limit EVT1 to EVT4 MV transmission: 0.0% to Transmission output 1 high limit	0.00 mg/L
TRc41 bEFH□	**Transmission output 1 status when calibrating** • Selects Transmission output 1 output status when calibrating DO concentration. • Selection item: bEFH□: Last value HOLD SETH□: Set value HOLD (Outputs the value set in [Transmission output 1 value HOLD when calibrating].) PVH□□: Measured value (Outputs the measured value when calibrating DO concentration.)	Last value HOLD
TRSE 1 □□0.00	**Transmission output 1 value HOLD when calibrating** • Sets Transmission output 1 value HOLD. • Available only when SETH (Set value HOLD) is selected in [Transmission output 1 status when calibrating]. • Setting range: DO concentration transmission: 0.00 to 20.00 mg/L Water temperature transmission: 0.0 to 50.0℃ DO % saturation transmission: 0.0 to 200.0% Oxygen partial pressure transmission: 0.0 to 150.0 kPa EVT1 to EVT4 MV transmission: 0.0 to 100.0%	0.00 mg/L

6.4 Transmission Output 2 Group

To enter Transmission Output 2 Group, follow the procedure below.

① TR.o2 Press the MODE key 3 times in Display Mode or Cleansing Output Mode.

② TRo2 Press the SET key.
The unit enters Transmission Output 2 Group, and “Transmission output 2 type” will appear.

Character	Setting Item, Function, Setting Range	Factory Default
TRo2 do	**Transmission output 2 type**	DO concentration transmission
	• Selects Transmission output 2 type. • do : DO concentration transmission WTEMP : Water temperature transmission doSAT : DO % saturation transmission WPRES : Oxygen partial pressure transmission MV 1 : EVT1 MV transmission MV2 : EVT2 MV transmission MV3 : EVT3 MV transmission (*) MV4 : EVT4 MV transmission (*)	
TRLH2 20.00	**Transmission output 2 high limit**	20.00 mg/L
	• Sets Transmission output 2 high limit value. (This value correponds to 20 mA DC output.) If Transmission output 2 high limit and low limit are set to the same value, Transmission output 2 will be fixed at 4 mA DC. • Setting range: DO concentration transmission: Transmission output 2 low limit to 20.00 mg/L Water temperature transmission: Transmission output 2 low limit to 50.0℃ DO % saturation transmission: Transmission output 2 low limit to 200.0% Oxygen partial pressure transmission: Transmission output 2 low limit to 150.0 kPa EVT1 to EVT4 MV transmission: Transmission output 2 low limit to 100.0%	

(*) Available when EVT3, EVT4 outputs (EVT3 option) are/is ordered.

Character	Setting Item, Function, Setting Range	Factory Default
rRLL2 □□0.00	**Transmission output 2 low limit** • Sets Transmission output 2 low limit value. (This value correponds to 4 mA DC output.) If Transmission output 2 high limit and low limit are set to the same value, Transmission output 2 will be fixed at 4 mA DC. • Setting range: DO concentration transmission: 0.00 mg/L to Transmission output 2 high limit Water temperature transmission: 0.0℃ to Transmission output 2 high limit DO % saturation transmission: 0.0% to Transmission output 2 high limit Oxygen partial pressure transmission: 0.0 kPa to Transmission output 2 high limit EVT1 to EVT4 MV transmission: 0.0% to Transmission output 2 high limit	0.00 mg/L
rRc42 bEFH□	**Transmission output 2 status when calibrating** • Selects Transmission output 2 output status when calibrating DO concentration. • Selection item: bEFH□: Last value HOLD 4ErH□: Set value HOLD (Outputs the value set in [Transmission output 2 value HOLD when calibrating].) PVH□□: Measured value (Outputs the measured value when calibrating DO concentration.)	Last value HOLD
rR4E2 □□0.00	**Transmission output 2 value HOLD when calibrating** • Sets Transmission output 2 value HOLD. • Available only when 4ErH (Set value HOLD) is selected in [Transmission output 2 status when calibrating]. • Setting range: DO concentration transmission: 0.00 to 20.00 mg/L Water temperature transmission: 0.0 to 50.0℃ DO % saturation transmission: 0.0 to 200.0% Oxygen partial pressure transmission: 0.0 to 150.0 kPa EVT1 to EVT4 MV transmission: 0.0 to 100.0%	0.00 mg/L

6.5 EVT1 Action Group

To enter the EVT1 Action Group, follow the procedure below.

① EVT.a.1 Press the MODE key 4 times in Display Mode or Cleansing Output Mode.

② EVT 1F Press the SET key.
The unit proceeds to the EVT1 Action Group, and "EVT1 type" will appear.

Character	Setting Item, Function, Setting Range	Factory Default
EVT 1F ----- (Fig. 6.5-1) (p.37) (Fig. 6.5-2) (P.38)	**EVT1 type** • Selects an EVT1 output (Contact output 1) type. **Note: If EVT1 type is changed, EVT1 value defaults to 0.00 or 0.0.** • ----- : No action do_H : DO concentration input high limit action do_L : DO concentration input low limit action WTMPH : Water temperature input high limit action WTMPL : Water temperature input low limit action do%_H : DO % saturation input high limit action do%_L : DO % saturation input low limit action WPR%H : Oxygen partial pressure input high limit action WPR%L : Oxygen partial pressure input low limit action T_cAP : Sensor cap replacement timer (Fig. 6.5-3) (p.38) cLEO : Cleansing output (Fig. 6.5-4) (p.39) do_HL : DO concentration input High/Low limits independent action TMPHL : Water temperature input High/Low limits independent action do%HL : DO % saturation input High/Low limits independent action WPRHL : Oxygen partial pressure input High/Low limits independent action	No action
EV 1 0.00	**EVT1 value** • Sets EVT1 value. • Not available for this setting item and all subsequent items if ----- (No action), T_cAP (Sensor cap replacement timer), or cLEO (Cleansing output) is selected in [EVT1 type]. • Setting range: DO concentration input: 0.00 to 20.00 mg/L Water temperature input: 0.0 to 50.0℃ DO % saturation input: 0.0 to 200.0% Oxygen partial pressure: 0.0 to 150.0 kPa	DO concentration input: 0.00 mg/L Water temperature input: 0.0℃ DO % saturation input: 0.0% Oxygen partial pressure input: 0.0 kPa

Character	Setting Item, Function, Setting Range	Factory Default
EP 1□□ □□0.00	**EVT1 proportional band** • Sets EVT1 proportional band. ON/OFF action when set to 0.00 or 0.0. • Not available if do_HL (DO concentration input High/Low limits independent action), TMPHL (Water temperature input High/Low limits independent action), doSHL (DO % saturation input High/Low limits independent action) or WPRHL (Oxygen partial pressure input High/Low limits independent action) is selected in [EVT1 type]. • Setting range: DO concentration input: 0.00 to 20.00 mg/L Water temperature input: 0.0 to 50.0℃ DO % saturation input: 0.0 to 200.0% Oxygen partial pressure: 0.0 to 150.0 kPa	DO concentration input: 0.00 mg/L Water temperature input: 0.0℃ DO % saturation input: 0.0% Oxygen partial pressure input: 0.0 kPa
E 1RSt □□0.00	**EVT1 reset** • Sets EVT1 reset value. • Not available if do_HL (DO concentration input High/Low limits independent action), TMPHL (Water temperature input High/Low limits independent action), doSHL (DO % saturation input High/Low limits independent action) or WPRHL (Oxygen partial pressure input High/Low limits independent action) is selected in [EVT1 type]. • Not available for ON/OFF action. • Setting range: DO concentration input: -2.00 to 2.00 mg/L Water temperature input: -5.0 to 5.0℃ DO % saturation input: -20.0 to 20.0% Oxygen partial pressure: -15.0 to 15.0 kPa	DO concentration input: 0.00 mg/L Water temperature input: 0.0℃ DO % saturation input: 0.0% Oxygen partial pressure input: 0.0 kPa
E 1dI F SdI F□	**EVT1 hysteresis type** • Selects EVT1 output hysteresis type (Medium or Reference Value). (Fig. 6.5-1) (p.37) • Not available if do_HL (DO concentration input High/Low limits independent action), TMPHL (Water temperature input High/Low limits independent action), doSHL (DO % saturation input High/Low limits independent action) or WPRHL (Oxygen partial pressure input High/Low limits independent action) is selected in [EVT1 type]. • Not available for the P action. • cdI F□: Medium Value Sets the same value for both ON and OFF sides in relation to EVT1 value. Only ON side needs to be set. SdI F□: Reference Value Sets individual values for ON and OFF sides in relation to EVT1 value. Both ON and OFF sides need to be set individually.	Reference Value

Character	Setting Item, Function, Setting Range	Factory Default
E 1dFo □□0.01	**EVT1 ON side**	DO concentration input: 0.01 mg/L Water temperature input: 1.0℃ DO % saturation input: 0.1% Oxygen partial pressure input: 0.1 kPa
	• Sets the span of EVT1 ON side. (Fig. 6.5-1) (p.37) If cdl F□ (Medium Value) is selected in [EVT1 hysteresis type], the span of ON/OFF side will be the same value. • Not available if do_HL (DO concentration input High/Low limits independent action), TMPHL (Water temperature input High/Low limits independent action), doSHL (DO % saturation input High/Low limits independent action) or WPRHL (Oxygen partial pressure input High/Low limits independent action) is selected in [EVT1 type]. • Not available for the P action. • Setting range: DO concentration input: 0.00 to 4.00 mg/L Water temperature input: 0.0 to 10.0℃ DO % saturation input: 0.0 to 40.0% Oxygen partial pressure input: 0.0 to 30.0 kPa	
E 1dFU □□0.01	**EVT1 OFF side**	DO concentration input: 0.01 mg/L Water temperature input: 1.0℃ DO % saturation input: 0.1% Oxygen partial pressure input: 0.1 kPa
	• Sets the span of EVT1 OFF side. (Fig. 6.5-1) (p.37) • Not available if do_HL (DO concentration input High/Low limits independent action), TMPHL (Water temperature input High/Low limits independent action), doSHL (DO % saturation input High/Low limits independent action) or WPRHL (Oxygen partial pressure input High/Low limits independent action) is selected in [EVT1 type]. • Not available for the P action, or if cdl F□ (Medium Value) is selected in [EVT1 hysteresis type]. • Setting range: DO concentration input: 0.00 to 4.00 mg/L Water temperature input: 0.0 to 10.0℃ DO % saturation input: 0.0 to 40.0% Oxygen partial pressure input: 0.0 to 30.0 kPa	
E 1dNT □□□0	**EVT1 ON delay time**	0 seconds
	• Sets EVT1 ON delay time. The EVT1 output does not turn ON after the input value exceeds the EVT1 value until the time set in [EVT1 ON delay time] elapses. • Not available for the P action. • Setting range: 0 to 10000 seconds	

Character	Setting Item, Function, Setting Range	Factory Default
E 1oFF □□□0	**EVT1 OFF delay time** • Sets EVT1 OFF delay time. The EVT1 output does not turn OFF after the input value exceeds the EVT1 value until the time set in [EVT1 OFF delay time] elapses. • Not available for the P action. • Setting range: 0 to 10000 seconds	0 seconds
E 1c□□ □□30	**EVT1 proportional cycle** • Sets EVT1 proportional cycle. • Not available if do_HL (DO concentration input High/Low limits independent action), TMPHL (Water temperature input High/Low limits independent action), do%HL (DO % saturation input High/Low limits independent action) or WPRHL (Oxygen partial pressure input High/Low limits independent action) is selected in [EVT1 type]. • Not available for the ON/OFF action. • Setting range: 1 to 300 seconds	30 seconds
E 1oLH □□ 100	**EVT1 output high limit** • Sets EVT1 output high limit value. • Not available if do_HL (DO concentration input High/Low limits independent action), TMPHL (Water temperature input High/Low limits independent action), do%HL (DO % saturation input High/Low limits independent action) or WPRHL (Oxygen partial pressure input High/Low limits independent action) is selected in [EVT1 type]. • Not available for the ON/OFF action. • Setting range: EVT1 output low limit to 100%	100%
E 1oLL □□□0	**EVT1 output low limit** • Sets EVT1 output low limit value. • Not available if do_HL (DO concentration input High/Low limits independent action), TMPHL (Water temperature input High/Low limits independent action), do%HL (DO % saturation input High/Low limits independent action) or WPRHL (Oxygen partial pressure input High/Low limits independent action) is selected in [EVT1 type]. • Not available for the ON/OFF action. • Setting range: 0% to EVT1 output high limit	0%
ooNT 1 □□□0	**Output ON Time when EVT1 Output ON** • Sets Output ON time when EVT1 output is ON. If ON time and OFF time are set, EVT1 output can be turned ON/OFF in a configured cycle when EVT1 output is turned ON.(Fig. 6.5-5, p.39) • Not available if do_HL (DO concentration input High/Low limits independent action), TMPHL (Water temperature input High/Low limits independent action), do%HL (DO % saturation input High/Low limits independent action) or WPRHL (Oxygen partial pressure input High/Low limits independent action) is selected in [EVT1 type]. • Not available for P action. • Setting range: 0 to 10000 seconds	0 seconds

Character	Setting Item, Function, Setting Range	Factory Default
oFF1 0	**Output OFF Time when EVT1 Output ON** • Sets Output OFF time when EVT1 output is ON. If ON time and OFF time are set, EVT1 output can be turned ON/OFF in a configured cycle when EVT1 output is turned ON.(Fig. 6.5-5) (p.39) • Not available if do_HL (DO concentration input High/Low limits independent action), TMPHL (Water temperature input High/Low limits independent action), doHL (DO % saturation input High/Low limits independent action) or WPRHL (Oxygen partial pressure input High/Low limits independent action) is selected in [EVT1 type]. • Not available for P action. • Setting range: 0 to 10000 seconds	0 seconds
E1_L 0.00	**EVT1 High/Low limits independent lower side value** • Sets the lower side value of EVT1 High/Low limits independent action. • Available for this setting item and all subsequent items when do_HL (DO concentration input High/Low limits independent action), TMPHL (Water temperature input High/Low limits independent action), doHL (DO % saturation input High/Low limits independent action) or WPRHL (Oxygen partial pressure input High/Low limits independent action) is selected in [EVT1 type]. • Setting range: DO concentration input: 0.00 to 20.00 mg/L Water temperature input: 0.0 to 50.0℃ DO % saturation input: 0.0 to 200.0% Oxygen partial pressure input: 0.0 to 150.0 kPa	DO concentration input: 0.00 mg/L Water temperature input: 0.0℃ DO % saturation input: 0.0% Oxygen partial pressure input: 0.0 kPa
E1_H 0.00	**EVT1 High/Low limits independent upper side value** • Sets the upper side value of EVT1 High/Low limits independent action. • Setting range: DO concentration input: 0.00 to 20.00 mg/L Water temperature input: 0.0 to 50.0℃ DO % saturation input: 0.0 to 200.0% Oxygen partial pressure input: 0.0 to 150.0 kPa	DO concentration input: 0.00 mg/L Water temperature input: 0.0℃ DO % saturation input: 0.0% Oxygen partial pressure input: 0.0 kPa
E1_HY 0.01	**EVT1 hysteresis** • Sets hysteresis of EVT1 High/Low limits independent action. • Setting range: DO concentration input: 0.01 to 2.00 mg/L Water temperature input: 1.0 to 5.0℃ DO % saturation input: 0.1 to 20.0% Oxygen partial pressure input: 0.1 to 15.0 kPa	DO concentration input: 0.01 mg/L Water temperature input: 1.0℃ DO % saturation input: 0.1% Oxygen partial pressure input: 0.1 kPa

EVT1 Action

<table>
<tr><th>EVT1 Type</th><th>P Action</th><th>ON/OFF Action</th></tr>
<tr><td rowspan="2">• DO concentration input low limit action
• Water temperature input low limit action
• DO % saturation input low limit action
• Oxygen partial pressure input low limit action
(Activated based on the indication value.)</td><td rowspan="2"> 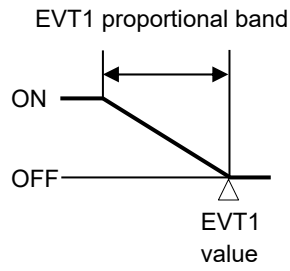
</td><td>If Medium Value is selected in [EVT1 hysteresis type]:
 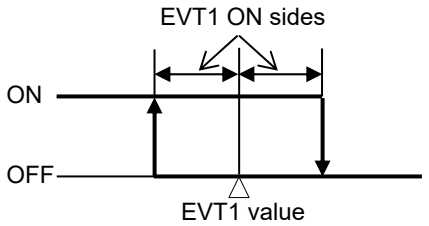
</td></tr>
<tr><td>If Reference Value is selected in [EVT1 hysteresis type]:
 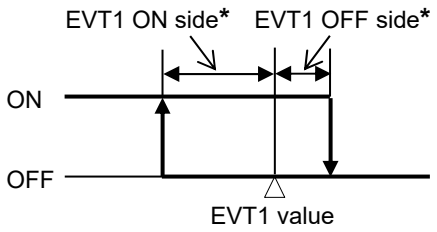
</td></tr>
<tr><td rowspan="2">• DO concentration input high limit action
• Water temperature input high limit action
• DO % saturation input high limit action
• Oxygen partial pressure input high limit action
(Activated based on the indication value.)</td><td rowspan="2"> 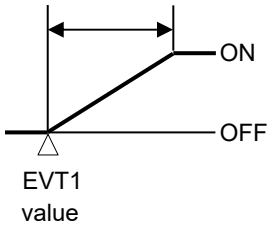
</td><td>If Medium Value is selected in [EVT1 hysteresis type]:
 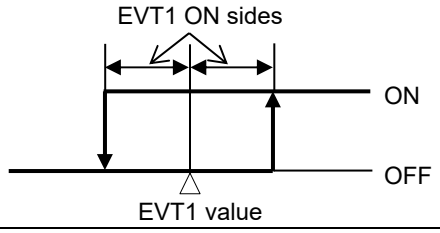
</td></tr>
<tr><td>If Reference Value is selected in [EVT1 hysteresis type]:
 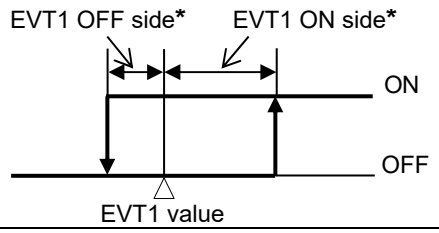
</td></tr>
</table>

(Fig. 6.5-1)

*** Setting Example:**

If [EVT1 ON side (E 1dFo)] is set to 0.00 or 0.0, EVT1 output can be turned ON at the value set in [EVT1 value (EVT 1)].

If [EVT1 OFF side (E 1dFU)] is set to 0.00 or 0.0, EVT1 output can be turned OFF at the value set in [EVT1 value (EVT 1)].

EVT1 Type	ON/OFF Action
• DO concentration input High/Low limits independent action • Water temperature input High/Low limits independent action • DO % saturation input High/Low limits independent action • Oxygen partial pressure input High/Low limits independent action (Activated based on the indication value.)	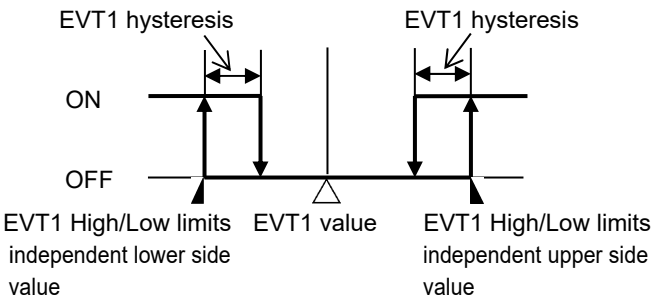

(Fig. 6.5-2)

• **Sensor Cap Replacement Timer Output**

If the set Sensor cap replacement timer value elapses, EVT1 output will be turned ON. Designate the Sensor cap replacement timer value in [EVT1 value] in the Basic Function Group.

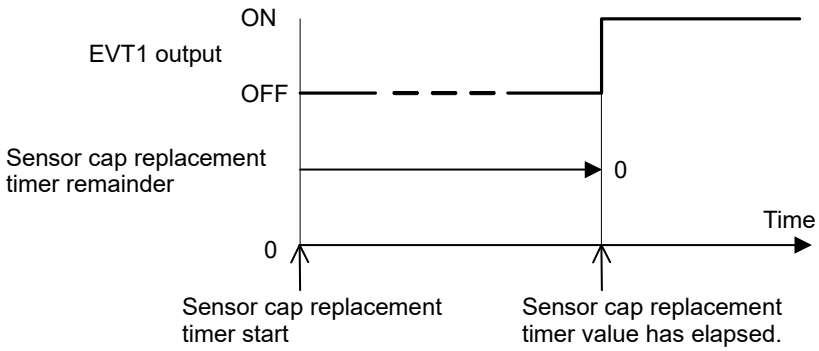

(Fig. 6.5-3)

• Cleansing Output

EVT1 output is turned ON during cleansing time after ‘Cleansing inactive interval’ has elapsed.
After ‘Standby after cleansing’ has passed, this action is repeated.

While cleansing action is being performed using ‘Cleansing time’ and ‘Standby after cleansing’, other outputs are in OFF status.
Measurement value (DO concentration, DO % saturation, Oxygen partial pressure, Water temperature) will be retained.
Normal programmed action will be performed, except during Cleansing Perform action.
If power is turned ON again, starts from ‘Cleansing inactive interval’.

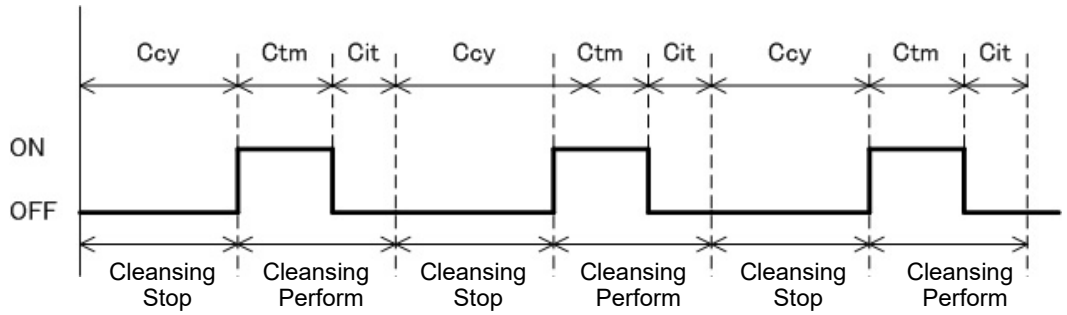

Ccy: Cleansing inactive interval
Ctm: Cleansing time
Cit: Standby after cleansing

(Fig. 6.5-4)

• Timing chart (Output ON time and OFF time when EVT1 output is ON)

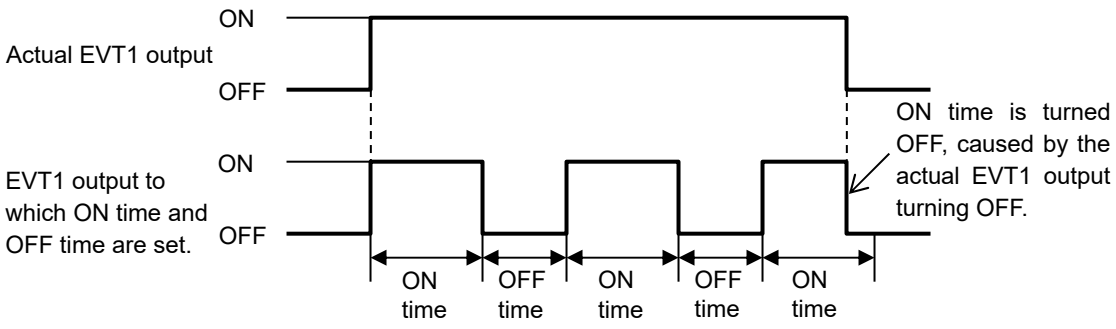

(Fig. 6.5-5)

6.6 EVT2 Action Group

To enter EVT2 Action Group, follow the procedure below.

① E.VT.a.2 Press the MODE key 5 times in Display Mode or Cleansing Output Mode.

② EVT 2F Press the SET key.
The unit proceeds to EVT2 Action Group, and ”EVT2 type“ appears.

Action, indication condition and setting range of EVT2 Action Group are the same as those of EVT1 Action Group.
Substitute EVT1 with EVT2 (1 with 2), and refer to EVT1 Action Group (pp. 32 to 39).

(e.g.) EVT 1F → EVT 2F
E4V 1□ → E4V 2□

6.7 EVT3 Action Group

Available when EVT3, EVT4 outputs (EVT3 option) are/is ordered.
To enter EVT3 Action Group, follow the procedure below.

① E.VT.a.3 Press the MODE key 6 times in Display Mode or Cleansing Output Mode.

② EVT 3F Press the SET key.
The unit proceeds to EVT3 Action Group, and ”EVT3 type“ appears.

Action, indication condition and setting range of EVT3 Action Group are the same as those of EVT1 Action Group.
Substitute EVT1 with EVT3 (1 with 3), and refer to EVT1 Action Group (pp. 32 to 39).

(e.g.) EVT 1F → EVT 3F
E4V 1□ → E4V 3□

6.8 EVT4 Action Group

Available when EVT3, EVT4 outputs (EVT3 option) are/is ordered.
To enter EVT4 Action Group, follow the procedure below.

① E.VT.a.4 Press the MODE key 7 times in Display Mode or Cleansing Output Mode.

② EVT 4F Press the SET key.
The unit proceeds to EVT4 Action Group, and ”EVT4 type“ appears.

Action, indication condition and setting range of EVT4 Action Group are the same as those of EVT1 Action Group.
Substitute EVT1 with EVT4 (1 with 4), and refer to EVT1 Action Group (pp. 32 to 39).

(e.g.) EVT 1F → EVT 4F
E4V 1□ → E4V 4□

6.9 Communication Group

Available when Serial communication (C5 option) is ordered.
To enter the Communication group, follow the procedure below.

① c.coMM Press the MODE key 6 times in Display Mode or Cleansing Output Mode.
If EVT3, EVT4 outputs (EVT3 option) are/is ordered, press the MODE key 8 times in Display Mode or Cleansing Output Mode.

② cMtL Press the SET key.
The unit enters the Communication Group, and "Communication protocol" will appear.

Character	Setting Item, Function, Setting Range	Factory Default
cMtL NoML	**Communication protocol** • Selects communication protocol. • Available when the Serial communication (C5) option is ordered. • NoML : Shinko protocol ModA : MODBUS ASCII mode ModR : MODBUS RTU mode	Shinko protocol
cMNo 0	**Instrument number** • Sets the instrument number of this unit. (The instrument numbers should be set one by one when multiple instruments are connected, otherwise communication is impossible.) • Available when the Serial communication (C5) option is ordered. • Setting range: 0 to 95	0
cMtP 96	**Communication speed** • Selects a communication speed equal to that of the host computer. • Available when the Serial communication (C5) option is ordered. • 96 : 9600 bps 192 : 19200 bps 384 : 38400 bps	9600 bps
cMPr 7EvN	**Data bit/Parity** • Selects data bit and parity. • Available when the Serial communication (C5) option is ordered. • 8NoN : 8 bits/No parity 7NoN : 7 bits/No parity 8EvN : 8 bits/Even 7EvN : 7 bits/Even 8odd : 8 bits/Odd 7odd : 7 bits/Odd	7 bits/Even

Character	Setting Item, Function, Setting Range	Factory Default
cMSr□ □□□1	**Stop bit** • Selects the stop bit. • Available when the Serial communication (C5) option is ordered. • □□□1: 1 bit □□□2: 2 bits	1 bit

6.10 Cleansing Group

To enter the Cleansing group, follow the procedure below.

① cLEO□ Press the MODE key as many times as necessary until the left characters appear in Display Mode or Cleansing Output Mode.

② cLNFM Press the SET key.
The unit enters the Cleansing Group, and “Cleansing time” will appear.

Character	Setting Item, Function, Setting Range	Factory Default
cLNFM □□30	**Cleansing time** • Sets the time to perform cleansing. (Fig. 6.10-1) • Setting range: 10 to 120 seconds	30 seconds
cLNcY oFF□□	**Cleansing inactive interval** • Sets the cleansing inactive interval. (Fig. 6.10-1) • Setting range: oFF□□ (None), 10 to 240 minutes	OFF (None)
cLNIT □□□0	**Standby after cleansing** • Sets standby time after cleansing action. (Fig. 6.10-1) • Setting range: 0 to 60 seconds	0 seconds

• Cleansing Function

Selected EVT output is turned ON during cleansing time after ‘Cleansing inactive interval’ has elapsed. After ‘Standby after cleansing’ has passed, cleansing action is repeated.

While cleansing action is performing using ‘Cleansing time’ and ‘Standby after cleansing’, other outputs are in OFF status.
Measurement value (DO concentration, DO % saturation, Oxygen partial pressure, Water temperature) will be retained.
Normal programmed action will be performed, except during Cleansing Perform action.
If power is turned on again, starts from ‘Cleansing inactive interval’.

Cleansing Output Action

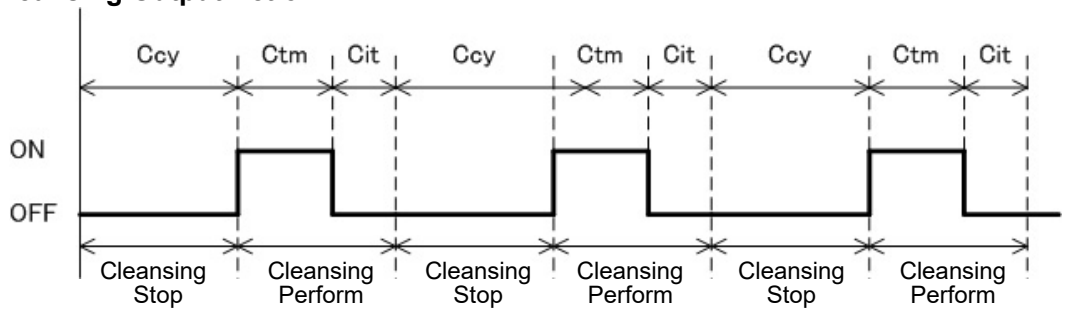

Ccy: Cleansing inactive interval
Ctm: Cleansing time
Cit: Standby after cleansing (Fig. 6.10-1)

• If cLEO□ (Cleansing output) is selected in any other [EVT type] during cleansing action, the current setting values (Cleansing time, Standby after cleansing, Cleansing inactive interval) will be used for the selected cleansing output.
If cleansing action (caused by cleansing cycle) is activated in calibration mode, cleansing action will not be performed in the current session.

• If oFF□□ (None) is selected in [Cleansing inactive interval], or if any item except cLEO□ (Cleansing output) is selected in [EVT type], Cleansing Output Mode will end, and the unit will revert to Display Mode.

6.11 Basic Function Group

To enter the Basic Function Group, follow the procedure below.

① aT.ER Press the MODE key as many times as necessary until the left characters appear in Display Mode or Cleansing Output Mode.

② Lock Press the SET key.
The unit enters the Basic Function Group, and the “Set value lock” will appear.

Character	Setting Item, Function, Setting Range	Factory Default
Lock -----	**Set value lock** • Locks the set values to prevent setting errors. • ----- (Unlock): All set values can be changed. Lock 1 (Lock 1): None of the set values can be changed. Lock2 (Lock 2): Only EVT1, EVT2, EVT3, EVT4 values can be changed. Lock3 (Lock 3): All set values can be temporarily changed. However, they revert to their previous value after the power is turned off because they are not saved in the non-volatile IC memory. Do not change setting items (EVT1, EVT2, EVT3, EVT4 types). If they are changed, they will affect other setting items. Be sure to select Lock 3 when changing the set value frequently via software communication. (If a value set via software communication is the same as the value before the setting, the value will not be written in non-volatile IC memory.)	Unlock
bKLT ALL	**Backlight selection** • Selects the display to backlight. • ALL : All are backlit. do : DO Display is backlit. tEM : Temperature Display is backlit. Ac : Action indicators are backlit. dotM : DO Display + Temperature Display are backlit. doAc : DO Display + Action indicators are backlit. tEMAc : Temperature Display + Action indicators are backlit.	All are backlit.

Character	Setting Item, Function, Setting Range	Factory Default
coLR REd	**DO color** • Selects a color for the DO Display. • GRN : Green REd : Red oRG : Orange doGR : DO color changes continuously. The DO Display color changes according to [DO color reference value] and [DO color range] settings. • When DO concentration is lower than [DO color reference value] – [DO color range]: Orange • When DO concentration is within [DO color reference value] ± [DO color range]: Green • When DO concentration is higher than [DO color reference value] + [DO color range]: Red 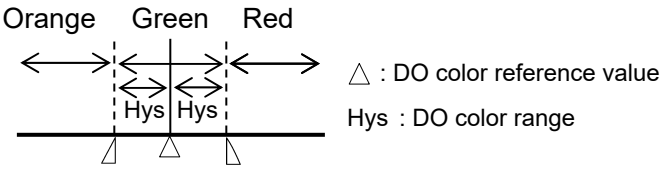 (Fig. 6.11-1)	Red
cLP 10.10	**DO color reference value** • Sets a reference value for DO concentration color to be green when doGR (DO color changes continuously) is selected in [DO color]. • Setting range: 0.00 to 20.00 mg/L	0.10 mg/L
cLRG 00.01	**DO color range** • Sets a range for DO concentration color to be green when doGR (DO color changes continuously) is selected in [DO color]. • Setting range: 0.01 to 20.00 mg/L	0.01 mg/L
dPTM 0000	**Backlight time** • Sets time to backlight from no operation status until backlight is switched off. When set to 0, the backlight remains ON. Backlight relights by pressing any key while backlight is OFF. • Setting range: 0 to 99 minutes	0 minutes

Character	Setting Item, Function, Setting Range	Factory Default
bERsL ------	**Bar graph indication** • Selects bar graph indication. • ----- : No indication rRoT 1 : Transmission output 1 rRoT 2 : Transmission output 2 Segments light in accordance with the output. Scale is -5 to 105%. Segments light from left to the right in accordance with the output. [When the output is 50%] -5% 50% 105% Light from left to the right in accordance with the output. (Fig. 6.11-2)	No indication
INERR oFF	**EVT output when input errors occur** • If input errors occur, EVT output can be Enabled or Disabled. If “Enabled” is selected, EVT output will be maintained when input errors occur. If “Disabled” is selected, EVT output will be turned OFF when input errors occur. • Available when the following type is selected in [EVT□ type]: do_H (DO concentration input high limit action) do_L (DO concentration input low limit action) WrMPH (Water temperature input high limit action) WrMPL (Water temperature input low limit action) dos_H (DO % saturation input high limit action) dos_L (DO % saturation input low limit action) WPRsH (Oxygen partial pressure input high limit action) WPRsL (Oxygen partial pressure input low limit action) • Selection item: oN: Enabled oFF: Disabled	Disabled
EsV 1 365	**EVT1 value** • Sets EVT1 (Sensor cap replacement timer) value. • Available when r_cAP (Sensor cap replacement timer) is selected in [EVT1 type]. • Setting range: 0 to 1095 days	365 days
EoNr 1 0	**EVT1 ON delay time** • Sets EVT1 ON delay time. The EVT1 output does not turn ON after the input value exceeds the EVT1 (Sensor cap replacement timer) value until the time set in [EVT1 ON delay time] elapses. • Available when r_cAP (Sensor cap replacement timer) is selected in [EVT1 type]. • Setting range: 0 to 10000 seconds	0 seconds

Character	Setting Item, Function, Setting Range	Factory Default
EoFF 1 □□□0	**EVT1 OFF delay time** • Sets EVT1 OFF delay time. The EVT1 output does not turn OFF after the input value exceeds the EVT1 (Sensor cap replacement timer) value until the time set in [EVT1 OFF delay time] elapses. • Available when r_cAP (Sensor cap replacement timer) is selected in [EVT1 type]. • Setting range: 0 to 10000 seconds	0 seconds
EVV2□ □□365	**EVT2 value** • Sets EVT2 (Sensor cap replacement timer) value. • Available when r_cAP (Sensor cap replacement timer) is selected in [EVT2 type]. • Setting range: 0 to 1095 days	365 days
EoN2 □□□0	**EVT2 ON delay time** • Sets EVT2 ON delay time. The EVT2 output does not turn ON after the input value exceeds the EVT2 (Sensor cap replacement timer) value until the time set in [EVT2 ON delay time] elapses. • Available when r_cAP (Sensor cap replacement timer) is selected in [EVT2 type]. • Setting range: 0 to 10000 seconds	0 seconds
EoF2 □□□0	**EVT2 OFF delay time** • Sets EVT2 OFF delay time. The EVT2 output does not turn OFF after the input value exceeds the EVT2 (Sensor cap replacement timer) value until the time set in [EVT2 OFF delay time] elapses. • Available when r_cAP (Sensor cap replacement timer) is selected in [EVT2 type]. • Setting range: 0 to 10000 seconds	0 seconds
EVV3□ □□365	**EVT3 value** • Sets EVT3 (Sensor cap replacement timer) value. • Available when EVT3, EVT4 outputs (EVT3 option) are/is ordered. Available when r_cAP (Sensor cap replacement timer) is selected in [EVT3 type]. • Setting range: 0 to 1095 days	365 days
EoN3 □□□0	**EVT3 ON delay time** • Sets EVT3 ON delay time. The EVT3 output does not turn ON after the input value exceeds the EVT3 (Sensor cap replacement timer) value until the time set in [EVT3 ON delay time] elapses. • Available when EVT3, EVT4 outputs (EVT3 option) are/is ordered. Available when r_cAP (Sensor cap replacement timer) is selected in [EVT3 type]. • Setting range: 0 to 10000 seconds	0 seconds

Character	Setting Item, Function, Setting Range	Factory Default
EoFT3 □□□0	**EVT3 OFF delay time** • Sets EVT3 OFF delay time. The EVT3 output does not turn OFF after the input value exceeds the EVT3 (Sensor cap replacement time) value until the time set in [EVT3 OFF delay time] elapses. • Available when EVT3, EVT4 outputs (EVT3 option) are/is ordered. Available when r_cAP (Sensor cap replacement timer) is selected in [EVT3 type]. • Setting range: 0 to 10000 seconds	0 seconds
EVV4□ □□365	**EVT4 value** • Sets EVT4 (Sensor cap replacement timer) value. • Available when EVT3, EVT4 outputs (EVT3 option) are/is ordered. Available when r_cAP (Sensor cap replacement timer) is selected in [EVT4 type]. • Setting range: 0 to 1095 days	365 days
EoNT4 □□□0	**EVT4 ON delay time** • Sets EVT4 ON delay time. The EVT4 output does not turn ON after the input value exceeds the EVT4 (Sensor cap replacement timer) value until the time set in [EVT4 ON delay time] elapses. • Available when EVT3, EVT4 outputs (EVT3 option) are/is ordered. Available when r_cAP (Sensor cap replacement timer) is selected in [EVT4 type]. • Setting range: 0 to 10000 seconds	0 seconds
EoFT4 □□□0	**EVT4 OFF delay time** • Sets EVT4 OFF delay time. The EVT4 output does not turn OFF after the input value exceeds the EVT4 (Sensor cap replacement timer) value until the time set in [EVT4 OFF delay time] elapses. • Available when EVT3, EVT4 outputs (EVT3 option) are/is ordered. Available when r_cAP (Sensor cap replacement timer) is selected in [EVT4 type]. • Setting range: 0 to 10000 seconds	0 seconds
REMC □□365	**Sensor cap replacement timer remainder** • Indicates the remaining time of the sensor cap replacement timer. • Setting range: 0 to 1095 days	365 days

6.12 Self-Check Group

To enter the Self-Check Group, follow the procedure below.

① SELF Press the MODE key as many times as necessary until the left characters appear in Display Mode or Cleansing Output Mode.

② **All lit** Press the SET key.
The unit enters the Self-Check Group, and “All lit mode” will appear.

Every time the SET key is pressed, modes progress as follows.

If the MODE key is held down for approx. 3 seconds at any setting mode, the unit will revert to the Display Mode or Cleansing Output Mode.

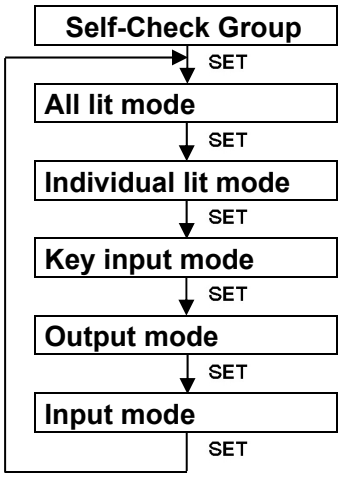

Each mode is described as follows.

Mode	Description	
All lit mode	All indications are lit. All displays and action indicators are lit. Backlight changes sequentially every 0.5 seconds as shown below.	
	Display	**Contents**
	DO Display	Green → Red → Orange → Unlit → Green
	Temperature Display	Green → Green → Green → Unlit → Green
	Action indicators	Orange → Orange → Orange → Unlit → Orange

<table>
<tr><th>Mode</th><th colspan="3">Description</th></tr>
<tr><td>Individual lit mode</td><td colspan="3">Each segment will be lit sequentially.
Each segment is lit sequentially every 0.5 seconds as shown below.
Indication repeats as follows.
1 → 2 → • • • • • → 19 → 1</td></tr>
<tr><td></td><td>Order</td><td colspan="2">Contents</td></tr>
<tr><td></td><td>1</td><td> </td><td>‘a’ segment of DO Display and Temperature Display</td></tr>
<tr><td></td><td>2</td><td> </td><td>‘b’ segment of DO Display and Temperature Display</td></tr>
<tr><td></td><td>3</td><td> </td><td>‘c’ segment of DO Display and Temperature Display</td></tr>
<tr><td></td><td>4</td><td> </td><td>‘d segment of DO Display and Temperature Display</td></tr>
<tr><td></td><td>5</td><td> </td><td>‘e’ segment of DO Display and Temperature Display</td></tr>
<tr><td></td><td>6</td><td> </td><td>‘f’ segment of DO Display and Temperature Display</td></tr>
<tr><td></td><td>7</td><td> </td><td>‘g’ segment of DO Display and Temperature Display</td></tr>
<tr><td></td><td>8</td><td> </td><td>‘dp’ segment of DO Display and Temperature Display</td></tr>
<tr><td></td><td>9</td><td> </td><td>‘h’ segment of DO Display and Temperature Display</td></tr>
<tr><td></td><td>10</td><td> </td><td>‘i’ segment of DO Display and Temperature Display</td></tr>
<tr><td></td><td>11</td><td> </td><td>‘k’ segment of DO Display and Temperature Display</td></tr>
<tr><td></td><td>12</td><td> </td><td>‘n’ segment of DO Display and Temperature Display</td></tr>
<tr><td></td><td>13</td><td>Bar graph</td><td>Output Display</td></tr>
<tr><td></td><td>14</td><td>LOCK</td><td>LOCK indicator</td></tr>
<tr><td></td><td>15</td><td>EVT1</td><td>EVT1 indicator</td></tr>
<tr><td></td><td>16</td><td>EVT2</td><td>EVT2 indicator</td></tr>
<tr><td></td><td>17</td><td>EVT3</td><td>EVT3 indicator</td></tr>
<tr><td></td><td>18</td><td>EVT4</td><td>EVT4 indicator</td></tr>
<tr><td></td><td>19</td><td>T/R</td><td>T/R indicator</td></tr>
</table>

<table>
<tr><th>Mode</th><th colspan="2">Description</th></tr>
<tr><td>Key input mode</td><td colspan="2">Characters allocated to each key are indicated.
The DO Display indicates KEY□□, and the Temperature Display indicates the following characters.
If 2 or more keys are pressed simultaneously, db□□□ will be indicated.</td></tr>
<tr><td></td><td>Temperature Display</td><td>Key Input</td></tr>
<tr><td></td><td>NoNE□</td><td>When no key is pressed.</td></tr>
<tr><td></td><td>UP□□□</td><td>When the △ key is pressed.</td></tr>
<tr><td></td><td>doWN□</td><td>When the ▽ key is pressed.</td></tr>
<tr><td></td><td>db□□□</td><td>When 2 or more keys are pressed simultaneously.</td></tr>
<tr><td>Output mode</td><td colspan="2">Each EVT output and Self-check output are turned ON.
Transmission output 1 and 2 will output 20 mA DC.
The DO Display indicates oUT□□, and the Temperature Display indicates the following characters.
Every time the △ key is pressed, each output is turned ON sequentially after checking.</td></tr>
<tr><td></td><td>Temperature Display</td><td>Output</td></tr>
<tr><td></td><td>oFF□□</td><td>All EVT outputs and Self-check output OFF.
Transmission output 1 and 2: 4 mA DC</td></tr>
<tr><td></td><td>EVT 1□</td><td>EVT1 output ON</td></tr>
<tr><td></td><td>EVT2□</td><td>EVT2 output ON</td></tr>
<tr><td></td><td>EVT3□</td><td>EVT3 output ON</td></tr>
<tr><td></td><td>EVT4□</td><td>EVT4 output ON</td></tr>
<tr><td></td><td>SELF□</td><td>Self-check output ON</td></tr>
<tr><td></td><td>rAnG 1</td><td>Transmission output 1: 20 mA DC</td></tr>
<tr><td></td><td>rAnG2</td><td>Transmission output 2: 20 mA DC</td></tr>
</table>

<table>
<tr><th>Mode</th><th>Description</th></tr>
<tr><td>Input mode</td><td>Indicates each input.
Every time the △ key is pressed, input checking is performed, and the DO Display indicates the corresponding input characters, and the Temperature Display indicates the corresponding measured value.
<table>
<tr><th>DO Display</th><th>Temperature Display</th></tr>
<tr><td>do□□□</td><td>DO concentration measured value</td></tr>
<tr><td>WTEMP</td><td>Water temperature measured value</td></tr>
<tr><td>doSAT</td><td>DO % saturation measured value</td></tr>
<tr><td>WPRES</td><td>Oxygen partial pressure measured value</td></tr>
<tr><td>NcAP□</td><td>Sensor cap serial number</td></tr>
</table>
If a communication error has occurred, or the DO Sensor is not connected, the Temperature Display indicates ERR 1□.
If sensor cap of the DO Sensor is not attached, or it is incorrectly attached, the Temperature Display indicates ERR2□.
If normal measurement value cannot be obtained from the DO Sensor, the Temperature Display indicates ERR4□.
Sensor cap serial number consists of 6 digits.
Since Temperature Display of this instrument has 5 digits, the DO Display indicates MSD, and the Temperature Display indicates the remaining 5 digits.
(e.g.) When serial number is 123456, it is alternately indicated as follows.
NcAP□ / □□□□ ⟷ □□□1 / 23456</td></tr>
</table>

6.13 Data Clear Group

To enter the Data Clear Group, follow the procedure below.

① cLR□□ Press the MODE key as many times as necessary until the left characters appears in Display Mode or Cleansing Output Mode.

② cLRYL Press the SET key.
The unit enters the Data Clear Group, and the “Data clear selection” will appear.

Character	Setting Item, Function, Setting Range	Factory Default
cLRYL cAL□□	**Data clear selection** • Selects Calibration value or Set value to clear. • cAL□□ : Calibration value YET□□ : Set value	Calibration value
cLR□□ No□□□	**Data clear Stop/Perform** • Selects Data clear Stop/Perform. • No□□□ : Data clear Stop YES□□ : Data clear Perform	Data clear Stop

Depending on the selection in [Data clear Stop/Perform], the unit operates as shown below.

- When ‘Data clear Stop’ is selected:
  Data clearing is not executed, and the unit returns to the mode prior to Data clear Stop (either Display Mode or Cleansing Output Mode).
- When ‘Data clear Perform’ is selected:
  Data is cleared. The unit returns to the mode prior to Data clear Perform (either Display Mode or Cleansing Output Mode).
  (While data is being cleared, all indications are momentarily unlit.)

7. Calibration

The following are descriptions for DO Concentration 1-point Calibration Mode, DO Concentration 2-point Calibration Mode, Concentration Option Calibration Mode, Transmission Output 1 and 2 Adjustment Modes.

7.1 DO Concentration Calibration

7.1.1 Preparation

(1) Clean the DO Sensor body and measurement section, and remove all moisture.

(2) Remove the storage cap of the calibration container, and replace with a calibration cap (ventilating cap).

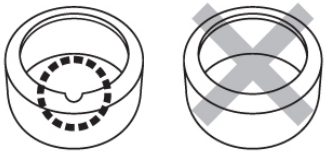

Calibration cap Storage cap

(Fig. 7.1.1-1)

(3) Keep the water, used for DO Sensor and calibration, at room temperature for approx. 30 minutes.

(4) Select a mode from Sections 7.1.2 (DO Concentration 1-point Calibration Mode), 7.1.3 (DO Concentration 2-point Calibration Mode), and 7.1.4 (Concentration Option Calibration Mode), and perform calibration.

7.1.2 DO Concentration 1-point Calibration Mode

⚠ Caution

- If salinity concentration has been previously corrected, return the salinity concentration correction value to 0 PSU, then start calibration.
  Refer to [Salinity correction (p.27)].
  If calibration is performed with salinity concentration being corrected, an error will occur or calibration will not be performed normally.
- When using a sensor in geographically high elevation sites, perform altitude correction for accurate calibration, then start calibration.
  Refer to [Altitude correction (p.27)].

The unit cannot enter DO concentration 1-point calibration mode in the following cases.

- When Lock 1 (Lock 1), Lock2 (Lock 2) or Lock3 (Lock 3) is selected in [Set value lock (p.44)]
- When cLEO (Cleansing output) is selected in any of [EVT1 to EVT4 types (p. 32)], and while cleansing action is performing using the 'Cleansing time' and 'Standby after cleansing'
- When the following errors have occurred.

Error Code	Description
ERR0	Non-volatile IC memory error
ERR 1	DO Sensor communication errors have occurred, or the DO Sensor is not connected.
ERR2	Sensor cap of the DO Sensor is not attached, or it is incorrectly attached.
ERR4	Normal measurement value cannot be obtained from the DO Sensor.

The following outlines the calibration procedure.

(1) Pour approx. 10 mL of ion-exchanged water into the calibration container sponge.

(2) Insert the DO Sensor into the calibration container until the measurement section of the sensor is situated approximately 2 cm away from the sponge.

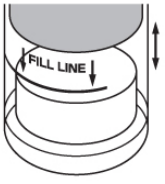

Approx. 2 cm

(Fig. 7.1.2-1)

(3) Allow it to settle, undisturbed, for 5 to 10 minutes.

⚠ Caution

• Do not leave the sensor attached to the calibration container for more than 30 minutes. This will result in dew condensation in measurement section, which will affect measurement value.
If dew condensation has occured, remove the moisture from the measurement section, then start calibration again.

(4) Press and hold the ▽ and MODE key (in that order) together for approx. 3 seconds in Display Mode or Cleansing Output Mode.
The unit moves to DO concentration 1-point calibration mode, and indicates the following.

Display	Indication Contents
DO Display	DO concentration measured value
Temperature Display	-1-

(5) Press the SET key.
1-point calibration (100% saturation calibration) starts.
During calibration, the measurement value on the DO Display flashes.

Display	Indication Contents
DO Display	DO concentration measured value flashes.
Temperature Display	-1-

(6) Wait at least 10 seconds to stabilize the DO concentration measured value.

(7) Press the SET key.
The measurement value will be fixed, and automatic calibration will be performed.
After calibration is finished, Displays show the following.

Display	Indication Contents
DO Display	CAL
Temperature Display	Good

1-point calibration (100% saturation calibration) is completed.

(8) Press the SET key.
The unit returns to DO concentration 1-point calibration mode.

If calibration cannot be performed during 1-point calibration (100% saturation calibration) due to unstable DO concentration input or temperature correction error, etc., the DO Display turns off, and the Temperature Display indicates ERR3.
To release the error code, press the MODE or SET key.

7.1.3 DO Concentration 2-point Calibration Mode

⚠ Caution

• When using a sensor in geographically high elevation sites, perform altitude correction for accurate calibration, then start calibration.
Refer to [Altitude correction (p.27)].

The unit cannot enter DO concentration 2-point calibration mode in the following cases.

• When Lock 1 (Lock 1), Lock2 (Lock 2) or Lock3 (Lock 3) is selected in [Set value lock (p.44)]

• When cLEO (Cleansing output) is selected in any of [EVT1 to EVT4 types (p.32)], and while cleansing action is performing using the 'Cleansing time' and 'Standby after cleansing'

• When the following errors have occurred.

Error Code	Description
ERR0	Non-volatile IC memory error
ERR 1	DO Sensor communication errors have occurred, or the DO Sensor is not connected.
ERR2	Sensor cap of the DO Sensor is not attached, or it is incorrectly attached.
ERR4	Normal measurement value cannot be obtained from the DO Sensor.

The following outlines the calibration procedure.

(1) Pour approx. 10 mL of ion-exchanged water into the calibration container sponge.

(2) Insert the DO Sensor into the calibration container until the measurement section of the sensor is situated approximately 2 cm away from the sponge.

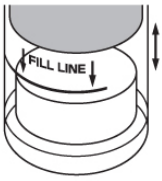

(Fig. 7.1.3-1)

(3) Allow it to settle, undisturbed, for 5 to 10 minutes.

⚠ Caution

• Do not leave the sensor attached to the calibration container for more than 30 minutes. This will result in dew condensation in measurement section, which will affect measurement value.
If dew condensation has occured, remove the moisture from the measurement section, then start calibration again.

(4) Press and hold the ▽ and MODE key (in that order) together for approx. 3 seconds in Display Mode or Cleansing Output Mode.

(5) Press the MODE key.
The unit moves to DO concentration 2-point calibration mode, and indicates the following.

Display	Indication Contents
DO Display	DO concentration measured value
Temperature Display	2-1

(6) Press the SET key.
1st-point calibration (100% saturation calibration) starts.
During calibration, the measurement value on the DO Display flashes.

Display	Indication Contents
DO Display	DO concentration measured value flashes.
Temperature Display	2-1

(7) Wait at least 10 seconds to stabilize the DO concentration measured value.

(8) Press the SET key.
The measured value will be fixed, and automatic calibration will be performed.
After 1st-point calibration (100% saturation calibration) is finished, Displays show the following.

Display	Indication Contents
DO Display	CAL 1
Temperature Display	NEXT

(9) Prepare a zero standard solution.
Zero standard solution is 100 mL of ion-exchanged water into which 5 g or more of sodium sulfite has been added and completely dissolved.

(10) Take out the calibration container sponge used for 1st-point calibration (100% saturation calibration), and pour the zero standard solution into the calibration container up to the Fill Line.

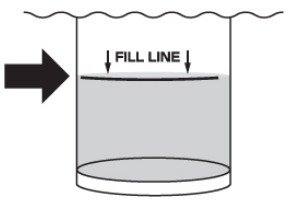

(Fig. 7.1.3-2)

(11) Insert the temperature sensor of the DO Sensor until it is immersed in the prepared zero standard solution.

⚠ Caution

- Insert the measurement section so that approximately 1 cm of gap is left between it and the bottom of the calibration container.
- Insert the measurement section so that air bubbles cannot attach to it.

(12) Allow it to settle, undisturbed, for at least 5 minutes to stabilize the temperature.

(13) Press the SET key.

2nd-point calibration (0-point calibration) starts.

During calibration, the measurement value on the DO Display flashes.

Display	Indication Contents
DO Display	DO concentration measured value flashes.
Temperature Display	2-2

(14) Wait at least 10 seconds to stabilize the DO concentration measured value.

(15) Press the SET key.

The measurement value will be fixed, and automatic calibration will be performed.

After 2nd-point calibration (0-point calibration) is finished, Displays show the following.

Display	Indication Contents
DO Display	CAL
Temperature Display	Good

2-point calibration (both 100% saturation calibration and 0-point calibration) is completed.

(16) Press the SET key.

The unit returns to DO concentration 2-point calibration mode.

If calibration cannot be performed during DO concentration 2-point concentration calibration due to unstable DO concentration input or temperature correction error, etc., the DO Display turns off, and the Temperature Display indicates ERR3.
To release the error code, press the MODE or SET key.

7.1.4 Concentration Option Calibration Mode

Immerse the DO Sensor in an aqueous solution (of known concentration), then the measurement value can be matched to the concentration.
Factory default value: 0.00 mg/L
DO concentration can be set within a range of 0.00 to 20.00 mg/L.

The unit cannot enter Concentration option calibration mode in the following cases.

- When Lock 1 (Lock 1), Lock2 (Lock 2) or Lock3 (Lock 3) is selected in [Set value lock (p.44)]
- When cLEO (Cleansing output) is selected in any of [EVT1 to EVT4 types (p. 32)], and while cleansing action is performing using the 'Cleansing time' and 'Standby after cleansing'
- When the following errors have occurred

Error Code	Description
ERR0	Non-volatile IC memory error
ERR 1	DO Sensor communication errors have occurred, or the DO Sensor is not connected.
ERR2	Sensor cap of the DO Sensor is not attached, or it is incorrectly attached.
ERR4	Normal measurement value cannot be obtained from the DO Sensor.

The following outlines the calibration procedure.
(e.g.) Setting of the already-known concentration of 7.77 mg/L

(1) Pour the already-known concentration solution into the calibration container up to the Fill Line.

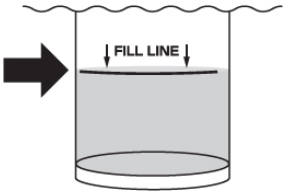

(Fig. 7.1.4-1)

(2) Insert the temperature sensor of the DO Sensor until it is immersed in the poured solution.

⚠ Caution

- Insert the measurement section so that approximately 1 cm of gap is left between it and the bottom of the calibration container.
- Insert the measurement section so that air bubbles cannot attach to it.

(3) Allow it to settle, undisturbed, for at least 5 minutes to stabilize the temperature.

(4) Press and hold the ▽ and MODE key (in that order) together for approx. 3 seconds in Display Mode or Cleansing Output Mode.

(5) Press the MODE key twice.
The unit moves to Concentration option calibration mode, and indicates the following.

Display	Indication Contents
DO Display	cAdr
Temperature Display	Concentration desired value

(6) Set the concentration desired value (7.77) with the △ or ▽ key, and press the SET key. The following will be indicated.

Display	Indication Contents
DO Display	DO concentration measured value flashes.
Temperature Display	- - - -

(7) Press the SET key.
The measurement value will be fixed, and calibration will be performed.
If concentration option calibration is finished, Displays show the following.

Display	Indication Contents
DO Display	cAL
Temperature Display	Good

Concentration option calibration is completed.

(8) Press the SET key.
The unit reverts to Concentration option calibration mode.

(9) Press the MODE key.
The unit reverts to Display Mode or Cleansing Output Mode.

If errors occur during concentration option calibration, the DO Display will turn off, and the Temperature Display will indicate ERR3.
To release the error code, press the MODE or SET key.

7.2 Transmission Output 1 Adjustment Mode

Fine adjustment of Transmission output 1 is performed.
This DO Meter (AER-102-DO) is adjusted at the factory, however, differences may occur between the indication value of the connected equipment (recorders, etc.) and output value of this unit. In this case, perform Transmission output 1 Zero and Span adjustments.

The unit cannot enter Transmission output 1 Zero adjustment mode in the following cases.

- When Lock 1 (Lock 1), Lock2 (Lock 2) or Lock3 (Lock 3) is selected in [Set value lock (p.44)]
- When cLEO (Cleansing output) is selected in any of [EVT1 to EVT4 types (p. 32)], and while cleansing action is performing using the 'Cleansing time' and 'Standby after cleansing'
- During DO concentration calibration
- When the following errors have occurred

Error Code	Description
ERR0	Non-volatile IC memory error
ERR 1	DO Sensor communication errors have occurred, or the DO sensor is not connected.
ERR2	Sensor cap of the DO Sensor is not attached, or it is incorrectly attached.
ERR4	Normal measurement value cannot be obtained from the DO Sensor.

The following outlines the procedure for Transmission output 1 adjustment.

(1) Press and hold the △ and SET key (in that order) together for approx. 3 seconds in Display Mode or Cleansing Output Mode.
The unit enters Transmission output 1 Zero adjustment, and indicates the following.

Display	Indication Contents
DO Display	AJ2 1
Temperature Display	Indicates Transmission output 1 Zero adjustment value.

(2) Set Transmission output 1 Zero adjustment value with the △, ▽ keys, while viewing the value indicated on the connected equipment (recorders, etc.).
Setting range: ±5.00% of Transmission output 1 span

(3) Press the SET key.
The unit enters Transmission output 1 Span adjustment mode, and indicates the following.

Display	Indication Contents
DO Display	AJ4 1
Temperature Display	Indicates Transmission output 1 Span adjustment value.

(4) Set Transmission output 1 Span adjustment value with the △, ▽ keys, while viewing the value indicated on the connected equipment (recorders, etc.).
Setting range: ±5.00% of Transmission output 1 Span

(5) Press the MODE key.
The unit reverts to Transmission output 1 Zero adjustment mode.
Repeat steps (2) to (5) if necessary.

(6) To finish Transmission output 1 adjustment, press the SET key in Transmission output 1 Span adjustment mode.
The unit reverts to Display Mode or Cleansing Output Mode.

7.3 Transmission Output 2 Adjustment Mode

Fine adjustment of Transmission output 2 is performed.
This DO Meter (AER-102-DO) is adjusted at the factory, however, differences may occur between the indication value of the connected equipment (recorders, etc.) and output value of this unit. In this case, perform Transmission output 2 Zero and Span adjustments.

The unit cannot enter Transmission output 2 Zero adjustment mode in the following cases.
- When Lock 1 (Lock 1), Lock2 (Lock 2) or Lock3 (Lock 3) is selected in [Set value lock (p.44)]
- When cLEO (Cleansing output) is selected in any of [EVT1 to EVT4 types (p. 32)], and while cleansing action is performing using the 'Cleansing time' and 'Standby after cleansing'
- During DO concentration calibration
- When the following errors have occurred

Error Code	Description
ERR0	Non-volatile IC memory error
ERR 1	DO Sensor communication errors have occurred, or the DO sensor is not connected.
ERR2	Sensor cap of the DO Sensor is not attached, or it is incorrectly attached.
ERR4	Normal measurement value cannot be obtained from the DO Sensor.

The following outlines the procedure for Transmission output 2 adjustment.

(1) Press and hold the ▽ and SET key (in that order) together for approx. 3 seconds in Display Mode or Cleansing Output Mode.
The unit enters Transmission output 2 Zero adjustment mode, and indicates the following.

Display	Indication Contents
DO Display	AJ2
Temperature Display	Indicates Transmission output 2 Zero adjustment value.

(2) Set Transmission output 2 Zero adjustment value with the △, ▽ keys, while viewing the value indicated on the connected equipment (recorders, etc.).
Setting range: ±5.00% of Transmission output 2 span

(3) Press the SET key.
The unit enters Transmission output 2 Span adjustment mode, and indicates the following.

Display	Indication Contents
DO Display	AJ42□
Temperature Display	Transmission output 2 Span adjustment value

(4) Set Transmission output 2 Span adjustment value with the △, ▽ keys, while viewing the value indicated on the connected equipment (recorders, etc.).
Setting range: ±5.00% of Transmission output 2 Span

(5) Press the MODE key.
The unit reverts to Transmission output 2 Zero adjustment mode.
Repeat steps (2) to (5) if necessary.

(6) To finish Transmission output 2 adjustment, press the SET key in Transmission output 2 Span adjustment mode.
The unit reverts to Display Mode or Cleansing Output Mode.

8. Measurement

8.1 Starting Measurement

After mounting to the control panel, wiring, setup and calibration are complete, turn the power to the instrument ON. For approx. 8 seconds after the power is switched ON, the following characters are indicated on the DO Display and Temperature Display.

Display	Indication Contents
DO Display	do□□
Temperature Display	□□ 1.00 [Version number (e.g.) 1.00]

During this time, all outputs are in OFF status, and action indicators turns off.
After that, measurement starts, indicating the item selected in [Backlight Selection (p. 44)].

Switching Between Modes

Every time the △ key is pressed, modes progress as follows.

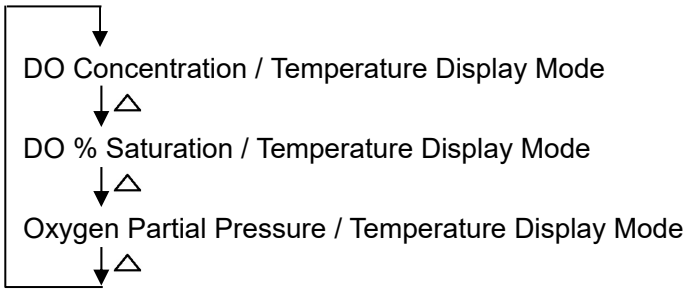

8.2 Outside Measurement Range

If DO concentration, DO % saturation, Oxygen partial pressure or temperature is outside the range, the following will be indicated.

Input	DO Display	Temperature Display
DO concentration	Flashes at 20.00 or 0.00.	Measured value
DO % saturation	Flashes at 200.0 or 0.0.	Measured value
Oxygen partial pressure	Flashes at 150.0 or 0.0.	Measured value
Temperature	Measured value	Flashes at 50.0 or 0.0.

8.3 Errors

For the following errors, error code is indicated on the Temperature Display.

Error Code	Description	Occurrence
ERR0	Non-volatile IC memory error	Constantly
ERR 1	DO Sensor communication errors have occurred, or DO Sensor is not connected. After a command is sent to the DO Sensor, if there is no response for 500 ms, the command will be sent again. If no response occurs 4 times consecutively, this error code will be displayed. If communication status returns to normal, the error will be released, and the unit will automatically return to normal status. When this error code is indicated, the previous measured value is retained.	When measuring and calibrating
ERR2	DO Sensor cap is not attached, or it is incorrectly attached.	
ERR3	Calibration error (If input errors have occurred, or if calibration cannot be performed 30 minutes after starting calibration)	When calibrating
ERR4	Normal measurement value cannot be obtained from the DO Sensor.	When measuring and calibrating

8.4 About Transmission Output 1 and Transmission Output 2

Converts DO concentration, water temperature, DO % saturation, Oxygen partial pressure or MV to analog signal every update cycle via communication, and outputs in current.

If Transmission output 1 high limit and low limit are set to the same value, Transmission output 1 will be fixed at 4 mA DC.

If Transmission output 2 high limit and low limit are set to the same value, Transmission output 2 will be fixed at 4 mA DC.

Resolution	12000
Current	4 to 20 mA DC (Load resistance: Max. 550 Ω)
Output accuracy	Within ±0.3% of Transmission output 1 or 2 span

For the following errors, Transmission output 1 or 2 will output 2 mA DC.

Error Code	Description
ERR 1	DO Sensor communication error, or DO Sensor is not connected.
ERR2	DO Sensor cap is not attached, or it is incorrectly attached.
ERR3	Calibration error (If input errors have occurred, or if calibration cannot be performed 30 minutes after starting calibration)
ERR4	Normal measurement value cannot be obtained from the DO Sensor.

8.5 Self-Check Output

Self-check output is turned ON for the following errors.

Error Code	Description
ERR 1	DO Sensor communication error, or DO Sensor is not connected.
ERR2	Sensor cap of the DO Sensor is not attached, or it is incorrectly attached.
ERR3	Calibration error (If input errors have occurred, or if calibration cannot be performed 30 minutes after starting calibration)
ERR4	Normal measurement value cannot be obtained from the DO Sensor.

8.6 EVT1 to EVT4 Outputs

If any one of the following actions is selected in [EVT1 type (p.32)], it will perform as (Fig. 8.6-1):

do_H (DO concentration input high limit action), do_L (DO concentration input low limit action), WTMPH (Water temperature input high limit action), WTMPL (Water temperature input low limit action), do%_H (DO % saturation input high limit action), do%_L (DO % saturation input low limit action), WPR%H (Oxygen partial pressure input high limit action), WPR%L (Oxygen partial pressure input low limit action)

The same applies to EVT2, EVT3 and EVT4 outputs.

• **EVT1 Action**

<table>
<tr><th>EVT1 Type</th><th>P Action</th><th>ON/OFF Action</th></tr>
<tr><td rowspan="2">• DO concentration input low limit action
• Water temperature input low limit action
• DO % saturation input low limit action
• Oxygen partial pressure input low limit action
(Activated based on the indication value.)</td><td rowspan="2"> 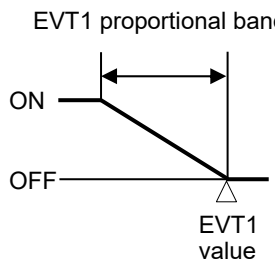
</td><td>If Medium Value is selected in [EVT1 hysteresis type]:
 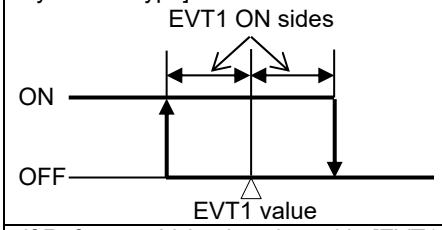
</td></tr>
<tr><td>If Reference Value is selected in [EVT1 hysteresis type]:
 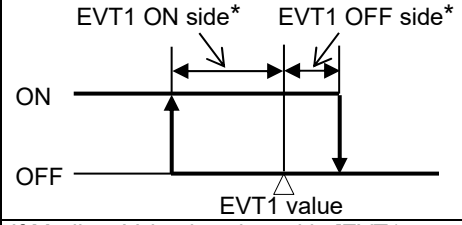
</td></tr>
<tr><td>• DO concentration input high limit action
• Water temperature input high limit action
• DO % saturation input high limit action
• Oxygen partial pressure input high limit action
(Activated based on the indication value.)</td><td> 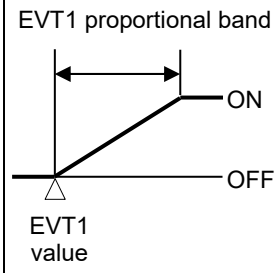
</td><td>If Medium Value is selected in [EVT1 hysteresis type]:
 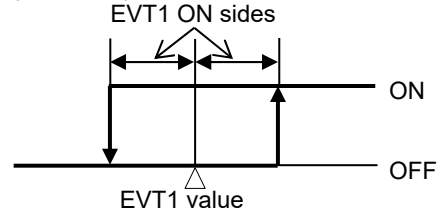

If Reference Value is selected in [EVT1 hysteresis type]:
 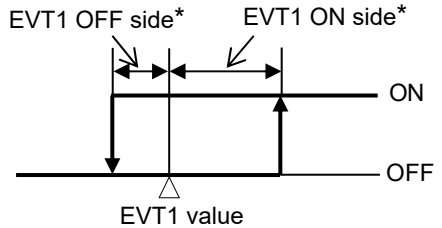
</td></tr>
</table>

(Fig. 8.6-1)

*** Setting Example:**

If [EVT1 ON side (E1dFo)] is set to 0.00 or 0.0, EVT1 output can be turned ON at the value set in [EVT1 value (EVT1)].

If [EVT1 OFF side (E1dFU)] is set to 0.00 or 0.0, EVT1 output can be turned OFF at the value set in [EVT1 value (EVT1)].

If any one of the following actions is selected in [EVT1 type (p.32)], it will perform as (Fig. 8.6-2): do_HL (DO concentration input High/Low limits independent action), TMPHL (Water temperature input High/Low limits independent action), doSHL (DO % saturation input High/Low limits independent action), WPRHL (Oxygen partial pressure input High/Low limits independent action)
The same applies to EVT2, EVT3 and EVT4 outputs.

• **EVT1 Action**

EVT1 Action	ON/OFF Action
• DO concentration input High/Low limits independent action • Water temperature input High/Low limits independent action • DO % saturation input High/Low limits independent action • Oxygen partial pressure input High/Low limits independent action (Activated based on the indication value.)	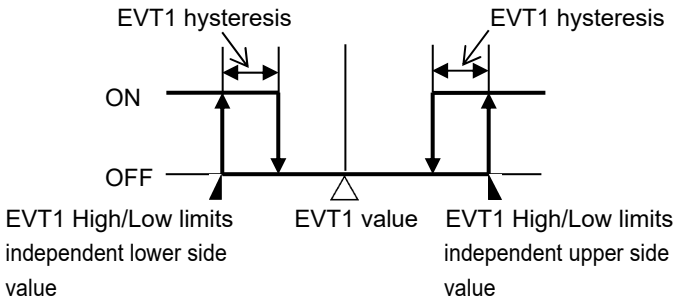

(Fig. 8.6-2)

• **P Action**

Within the proportional band, the manipulated variable is output in proportion to the deviation between the EVT1 value and measured value.

EVT1 Type	Description
• DO concentration input low limit • Water temperature input low limit • DO % saturation input low limit • Oxygen partial pressure input low limit	If measured value is lower than [EVT1 value – EVT1 proportional band], EVT1 output is turned ON. If measured value enters within the proportional band, EVT1 output is turned ON/OFF in EVT1 proportional cycles. If measured value exceeds the EVT1 value, EVT1 output is turned OFF.
• DO concentration input high limit • Water temperature input high limit • DO % saturation input high limit • Oxygen partial pressure input high limit	If measured value is higher than [EVT1 value + EVT1 proportional band], EVT1 output is turned ON. If measured value enters within the proportional band, EVT1 output is turned ON/OFF in EVT1 proportional cycles. If measured value drops below the EVT1 value, EVT1 output is turned OFF.

• **ON/OFF Action**

EVT1 Type	Description
• DO concentration input low limit • Water temperature input low limit • DO % saturation input low limit • Oxygen partial pressure input low limit	If measured value is lower than EVT1 value, EVT1 output is turned ON. If measured value exceeds the EVT1 value, EVT1 output is turned OFF.
• DO concentration input high limit • Water temperature input high limit • DO % saturation input high limit • Oxygen partial pressure input high limit	If measured value is higher than EVT1 value, EVT1 output is turned ON. If measured value drops below the EVT1 value, EVT1 output is turned OFF.

If ON and OFF time are set in [Output ON/OFF Time when EVT1 Output ON (pp.35, 36)], and when EVT1 output is turned ON, EVT1 output is turned ON/OFF at constant intervals.

Timing chart (Output ON time and OFF time when EVT1 output is ON)

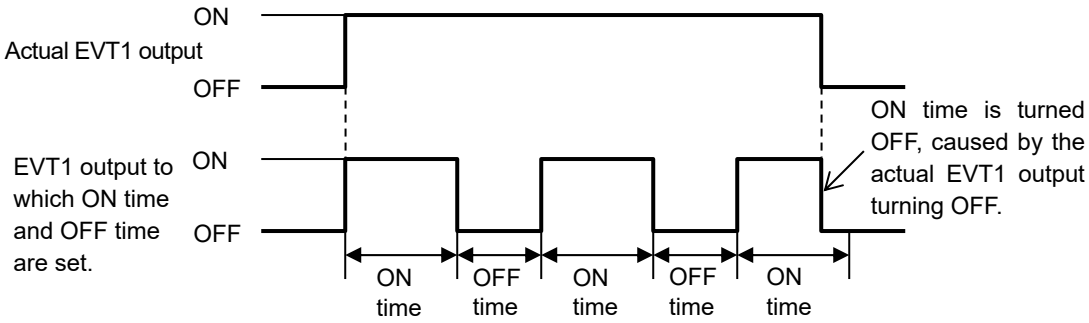

(Fig. 8.6-3)

EVT output status can be read by reading Status flag 2 (EVT1, EVT2, EVT3, EVT4 output flag bit) in Serial communication (C5 option).

EVT output status, when input errors occur, differs depending on the selection in [EVT output when input errors occur (p.46)].

- If oFF (Disabled) is selected: EVT output is turned OFF when input errors occur.
- If oN (Enabled) is selected: EVT output is maintained when input errors occur.

8.7 Sensor Cap Replacement Timer Output

When r_cAP (Sensor cap replacement timer output) is selected in any of [EVT1 to EVT4 types (p. 32)], the unit operates as follows.

(1) If sensor cap replacement timer value has elapsed, the selected EVT output will be turned ON. (*1)
The DO Display indicates DO concentration measured value and r_cAP alternately, informing the user to replace the sensor cap. (*2)

(2) Replace the sensor cap.
After replacing the sensor cap, this unit automatically resets the Sensor cap replacement remainder to the Sensor cap replacement timer value.

Sensor Cap Replacement Timer Output

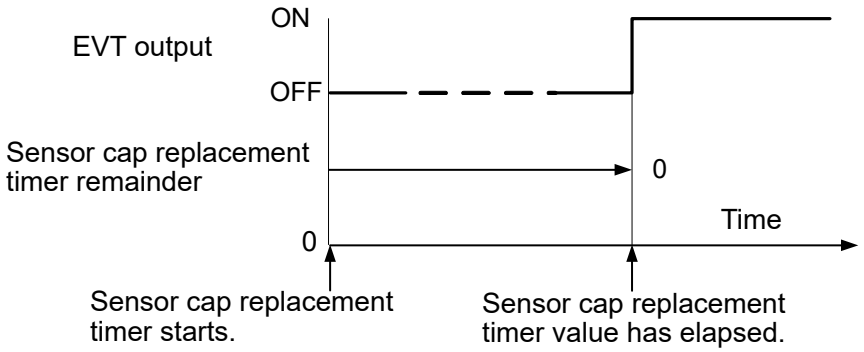

(Fig. 8.7-1)

(*1) Even if power to the instrument is turned OFF and ON, EVT output remains ON until the sensor cap is replaced.

(*2) After Sensor cap replacement timer value has elapsed, and if an error has occurred simultaneously, r_cAP and the error code will be displayed alternately.
After Sensor cap replacement timer value has elapsed, and if Outside measurement range error has occurred simultaneously, r_cAP and the Outside measurement range value will be displayed alternately.

8.8 Cleansing Output

If cLEO (Cleansing output) is selected in any of [EVT1 to EVT4 type (p. 32)], the unit will enter Cleansing Output Mode.

After 'Cleansing inactive interval' has elapsed, the selected EVT output is turned ON during the 'cleansing time'.
After 'Standby after cleansing' has passed, the above action is repeated.

While cleansing is being performed using 'Cleansing time' and 'Standby after cleansing', other outputs are in OFF status.
Measured values (DO concentration, DO % saturation, Oxygen partial pressure, water temperature) are retained.
Normal programmed action will be performed, except during 'Cleansing Perform'.
When power is turned ON again, starts from 'Cleansing inactive interval'.

• **Cleansing Output Action**

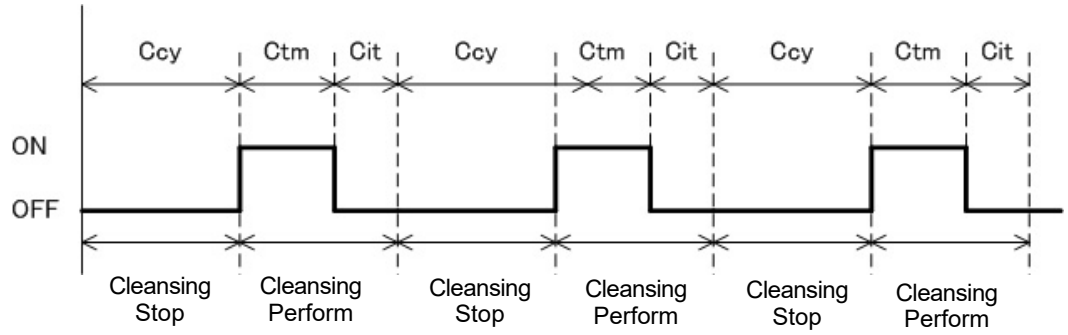

Ccy: Cleansing inactive interval
Ctm: Cleansing time
Cit: Standby after cleansing

(Fig. 8.8-1)

• If cLEO (Cleansing output) is selected in any other [EVT type] during cleansing action, the current setting values (Cleansing time, Standby after cleansing, Cleansing inactive interval) will be used for the selected cleansing output.
If cleansing action (caused by cleansing cycle) is activated in calibration mode, cleansing action will not be performed in the current session.

• If oFF (None) is selected in [Cleansing inactive interval], or if any item except cLEO (Cleansing output) is selected in [EVT1 to EVT4 types (p.32)], Cleansing Output Mode will end, and the unit will revert to Display Mode.

If cLEO (Cleansing output) is selected in any of [EVT1 to EVT4 types (p.32)], and if oFF (None) is selected in [Cleansing inactive interval], only Forced cleansing mode will be enabled.

8.9 Forced Cleansing Mode

To enter the Forced cleansing mode, press the SET key for approx. 3 seconds.
In Forced cleansing mode, cleansing is performed using 'Cleansing time' and 'Standby after cleansing'. After cleansing action is finished, the unit automatically reverts to Cleansing Output Mode.
This mode will not be accessible by the SET key if programmed cleansing is currently being performed.
During Forced cleansing mode, if programmed cleansing action initiates after 'Cleansing inactive interval' has passed, the programmed cleansing action will not be performed in the current session.

Forced Cleansing Mode Action

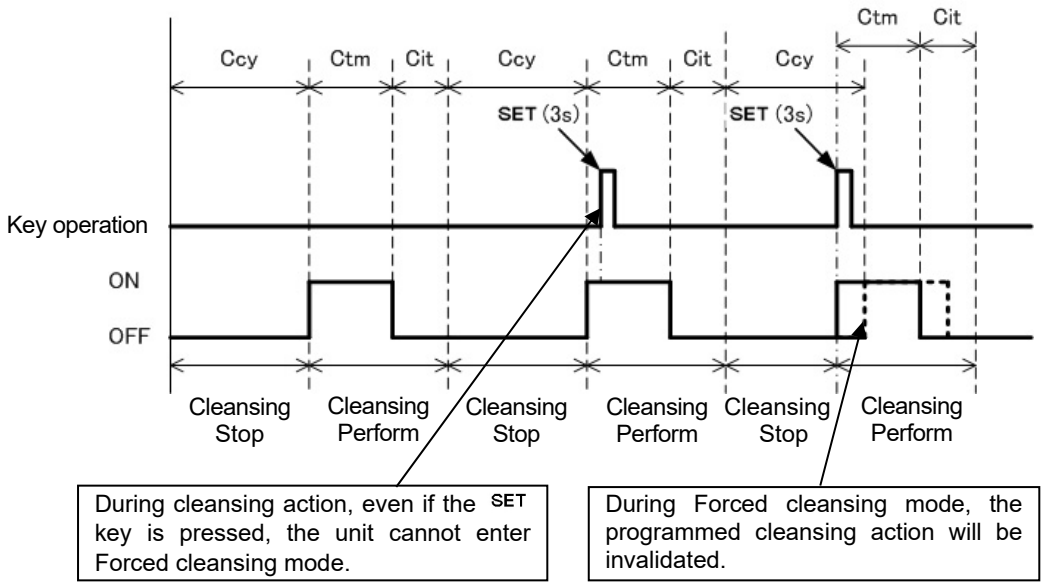

Ccy: Cleansing inactive interval
Ctm: Cleansing time
Cit: Standby after cleansing

(Fig. 8.9-1)

9. Specifications

9.1 Specifications

9.1.1 Standard Specifications

Rating

Rated scale	**Input**	**Input Range**	**Resolution**
	DO concentration	0.00 to 20.00 mg/L	0.01 mg/L
	DO % saturation	0.0 to 200.0%	0.1%
	Oxygen partial pressure	0.0 to 150.0 kPa	0.1 kPa
	Temperature	0.0 to 50.0℃	0.1℃
Input	Optical DO Sensor		
Power supply voltage	Model	**AER-102-DO**	**AER-102-DO 1**
	Power supply voltage	100 to 240 V AC 50/60 Hz	24 V AC/DC 50/60 Hz
	Allowable voltage fluctuation range	85 to 264 V AC	20 to 28 V AC/DC

General Structure

External dimensions	48 x 96 x 98.5 mm (W x H x D)	
Mounting	Flush (Applicable panel thickness 1 to 8 mm)	
Case	Material: Flame-resistant resin, Color: Black	
Front panel	Membrane sheet	
Indicating structure	Display	
	DO Display	11-segment LCD display 5-digits Backlight Red/Green/Orange Character size: 14.0 x 5.4 mm (H x W)
	Temperature Display	11-segment LCD display 5-digits Backlight Green Character size: 10.0 x 4.6 mm (H x W)
	Output Display	Bar graph LCD display 22-dots Backlight Green
	Action indicators: Backlight Orange	
	EVT1	EVT1 output (Contact output 1) ON: Lit
	EVT2	EVT2 output (Contact output 2) ON: Lit
	EVT3	EVT3 output (Contact output 3) ON: Lit
	EVT4	EVT4 output (Contact output 4) ON: Lit
	T/R	Serial communication TX output (transmitting): Lit
	LOCK	Lock 1, Lock 2 or Lock 3 is selected: Lit
Setting structure	Input system using membrane sheet key	

Indication Performance

Indication accuracy	Depends on the accuracy of Optical DO Sensor.
Time accuracy	Within ±1% of setting time
Data update cycle	5 seconds

Standard Function

Calibration		DO concentration 1-point calibration, DO concentration 2-point calibration, Concentration option calibration	
Signal output response time		Moving average is calculated from the desired output response time, and the resulting value is updated every Data update cycle (5 seconds) as a measurement value. However, signal output response time setting will be invalidated during DO concentration calibration mode, Transmission output 1 or 2 adjustment modes.	
Transmission output 1		Converts any one of – DO concentration, water temperature, DO % saturation, Oxygen partial pressure or MV – to an analog signal every update cycle, and outputs in current. If Transmission output 1 high limit and low limit are set to the same value, Transmission output 1 will be fixed at 4 mA DC.	
		Resolution	12000
		Current	4 to 20 mA DC (Load resistance, Max. 550 Ω)
		Output accuracy	Within ±0.3% of Transmission output 1 span
	Transmission output 1 adjustment	Fine adjustment of the Transmission output 1 is performed via Transmission output 1 Zero and Span adjustments.	
	Transmission output 1 status when calibrating	Selects Transmission output 1 output status when calibrating DO concentration.	
		Last value HOLD	Retains the last value before DO concentration calibration, and outputs it.
		Set value HOLD	Outputs the value set in [Transmission output 1 value HOLD when calibrating].
		Measured value	Outputs the measured value when calibrating DO concentration.
Transmission output 2		Converts any one of – DO concentration, water temperature, DO % saturation, Oxygen partial pressure or MV – to an analog signal every update cycle, and outputs in current. If Transmission output 2 high limit and low limit are set to the same value, Transmission output 2 will be fixed at 4 mA DC.	
		Resolution	12000
		Current	4 to 20 mA DC (Load resistance: Max. 550 Ω)
		Output accuracy	Within ±0.3% of Transmission output 2 span
	Transmission output 2 adjustment	Fine adjustment of the Transmission output 2 is performed via Transmission output 2 Zero and Span adjustments.	
	Transmission output 2 status when calibrating	Selects Transmission output 2 output status when calibrating DO concentration.	
		Last value HOLD	Retains the last value before DO concentration calibration, and outputs it.
		Set value HOLD	Outputs the value set in [Transmission output 2 value HOLD when calibrating].
		Measured value	Outputs the measured value when calibrating DO concentration.

<table>
<tr><td>Self-check output</td><td colspan="3">Self-check output is turned ON when the following error has occurred.</td></tr>
<tr><td></td><td>ERR 1□</td><td colspan="2">DO Sensor communication errors have occurred, or DO Sensor is not connected.</td></tr>
<tr><td></td><td>ERR2□</td><td colspan="2">Sensor cap of the DO Sensor is not attached, or it is incorrectly attached.</td></tr>
<tr><td></td><td>ERR3□</td><td colspan="2">Calibration error
(If input errors have occurred, or if calibration cannot be performed 30 minutes after starting calibration.)</td></tr>
<tr><td></td><td>ERR4□</td><td colspan="2">Normal measurement value cannot be obtained from the DO Sensor.</td></tr>
<tr><td>EVT output</td><td colspan="3"></td></tr>
<tr><td>Output</td><td colspan="3">P action: When setting the proportional band to any other value except 0.00 or 0.0
ON/OFF action: When setting the proportional band to 0.00 or 0.0</td></tr>
<tr><td></td><td rowspan="4">EVT□
proportional band</td><td>DO concentration input</td><td>0.00 to 20.00 mg/L</td></tr>
<tr><td></td><td>Water temperature input</td><td>0.0 to 50.0℃</td></tr>
<tr><td></td><td>DO % saturation input</td><td>0.0 to 200.0%</td></tr>
<tr><td></td><td>Oxygen partial pressure input</td><td>0.0 to 150.0 kPa</td></tr>
<tr><td></td><td>EVT□
proportional cycle</td><td colspan="2">1 to 300 seconds</td></tr>
<tr><td></td><td rowspan="4">EVT□
ON side, OFF side</td><td>DO concentration input</td><td>0.00 to 4.00 mg/L</td></tr>
<tr><td></td><td>Water temperature input</td><td>0.0 to 10.0℃</td></tr>
<tr><td></td><td>DO % saturation input</td><td>0.0 to 40.0%</td></tr>
<tr><td></td><td>Oxygen partial pressure input</td><td>0.0 to 30.0 kPa</td></tr>
<tr><td></td><td>Output high, low limits</td><td colspan="2">0 to 100%</td></tr>
<tr><td></td><td rowspan="4">EVT□
High/Low limits independent upper, lower side value</td><td>DO concentration input</td><td>0.00 to 20.00 mg/L</td></tr>
<tr><td></td><td>Water temperature input</td><td>0.0 to 50.0℃</td></tr>
<tr><td></td><td>DO % saturation input</td><td>0.0 to 200.0%</td></tr>
<tr><td></td><td>Oxygen partial pressure input</td><td>0.0 to 150.0 kPa</td></tr>
<tr><td></td><td rowspan="4">EVT□
hysteresis</td><td>DO concentration input</td><td>0.01 to 2.00 mg/L</td></tr>
<tr><td></td><td>Water temperature input</td><td>1.0 to 5.0℃</td></tr>
<tr><td></td><td>DO % saturation input</td><td>0.1 to 20.0%</td></tr>
<tr><td></td><td>Oxygen partial pressure input</td><td>0.1 to 15.0 kPa</td></tr>
</table>

	EVT type	Selectable by keypad operation. • No action • DO concentration input high limit action • DO concentration input low limit action • Water temperature input high limit action • Water temperature input low limit action • DO % saturation input high limit action • DO % saturation input low limit action • Oxygen partial pressure input high limit action • Oxygen partial pressure input low limit action • Sensor cap replacement timer • Cleansing output • DO concentration input High/Low limits independent action • Water temperature input High/Low limits independent action • DO % saturation input High/Low limits independent action • Oxygen partial pressure input High/Low limits independent action	
	Output	Relay contact 1a1b	
		Control capacity	3 A 250 V AC (resistive load) 1 A 250 V AC (inductive load cosϕ=0.4)
		Electrical life	100,000 cycles
	EVT□ ON delay time	0 to 10000 seconds	
	EVT□ OFF delay time	0 to 10000 seconds	
	Output ON Time/ OFF Time when EVT□ Output ON	If ON time and OFF time are set, the output can be turned ON/OFF in a configured cycle when EVT□ output is ON.	
	Sensor cap replacement timer output	The selected EVT output is turned ON after sensor cap replacement timer value has elapsed (Sensor cap replacement timer remainder is “0”). DO concentration measured value and Γ_cAP are alternately indicated on the DO Display.	
	Cleansing output	**Cleansing Output Mode**: After ‘Cleansing inactive interval’ has elapsed, the selected EVT output is turned ON during the preset ‘Cleansing time’. After ‘Standby after cleansing’ has passed, the above action is repeated. While cleansing is being performed using ‘Cleansing time’ and ‘Standby after cleansing’, other outputs are in OFF status. The measured values (DO concentration, DO % saturation, Oxygen partial pressure, water temperature) are retained. Normal programmed action will be performed, except during ‘Cleansing Perform’. When power is turned ON again, starts from ‘Cleansing inactive interval’.	

		Forced Cleansing Mode: By pressing the SET key for approx. 3 seconds, the unit enters Forced cleansing mode. In Forced cleansing mode, cleansing is performed using 'Cleansing time' and 'Standby after cleansing'. After cleansing action is finished, the unit automatically reverts to Cleansing Output Mode. This mode will not be accessible by the SET key if programmed cleansing is currently being performed. During Forced cleansing mode, if programmed cleansing action initiates after 'Cleansing inactive interval' has passed, the programmed cleansing action will not be performed in the current session.

Insulation, Dielectric Strength

Circuit insulation configuration	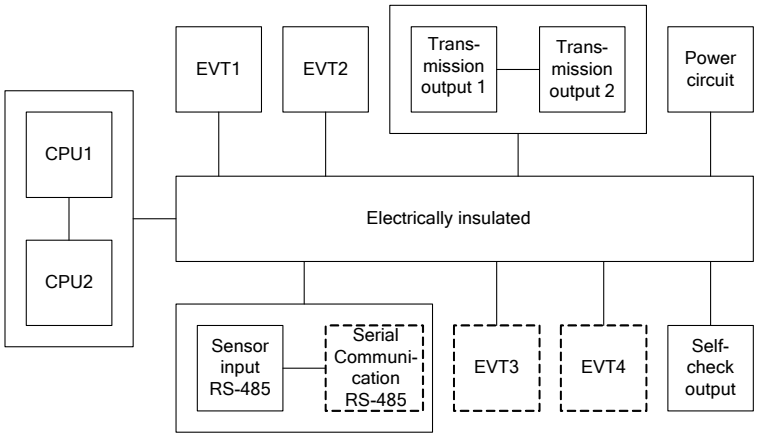 : When the corresponding option is ordered. Insulation Resistance: 10 MΩ minimum, at 500 V DC
Dielectric strength	Power terminal – ground (GND): 1.5 kV AC for 1 minute Input terminal – ground (GND): 1.5 kV AC for 1 minute Input terminal – power terminal: 1.5 kV AC for 1 minute

Attached Function

Set value lock	Lock 1: None of the set values can be changed. Lock 2: Only EVT1, EVT2, EVT3, EVT4 values can be changed. Lock 3: All set values can be temporarily changed. However, they revert to their previous value after the power is turned off because they are not saved in the non-volatile IC memory.

<table>
<tr><td>Outside measurement range</td><td>If inputs (DO concentration, DO % saturation, Oxygen partial pressure, Temperature) are outside the measurement range, the following will be indicated.
<table>
<tr><th>Input</th><th>DO Display</th><th>Temperature Display</th></tr>
<tr><td>DO concentration</td><td>Flashes at 20.00 or 0.00.</td><td>Measured value</td></tr>
<tr><td>DO % saturation</td><td>Flashes at 200.0 or 0.0.</td><td>Measured value</td></tr>
<tr><td>Oxygen partial pressure</td><td>Flashes at 150.0 or 0.0.</td><td>Measured value</td></tr>
<tr><td>Temperature</td><td>Measured value</td><td>Flashes at 50.0 or 0.0.</td></tr>
</table></td></tr>
<tr><td>Power failure countermeasure</td><td>The setting data is backed up in the non-volatile IC memory.</td></tr>
<tr><td>Self-diagnosis</td><td>The CPU is monitored by a watchdog timer, and if an abnormal status occurs, the AER-102-DO is switched to warm-up status.</td></tr>
<tr><td>Warm-up Indication</td><td>For approx. 8 seconds after the power is switched ON, characters below are indicated on the DO Display and Temperature Display.
<table>
<tr><th>DO Display</th><th>Temperature Display</th></tr>
<tr><td>do□□□</td><td>□□ 100 [Version No. (e.g.) 1.00]</td></tr>
</table></td></tr>
<tr><td>DO concentration color</td><td>Selects the color of the DO Concentration Display.
<table>
<tr><th>[DO Color (P.45)] Selection Item</th><th>DO Color</th></tr>
<tr><td>GRN□□</td><td>Green</td></tr>
<tr><td>REd□□</td><td>Red</td></tr>
<tr><td>oRG□□</td><td>Orange</td></tr>
<tr><td>doGR□</td><td>DO color changes continuously.</td></tr>
</table>
DO Color:
The DO color changes according to [DO color reference value (p.45)] and [DO color range (p.45)] settings.
• When DO concentration is lower than [DO color reference value] – [DO color range]: Orange
• When DO concentration is within [DO color reference value] ± [DO color range]: Green
• When DO concentration is higher than [DO color reference value] + [DO color range]: Red
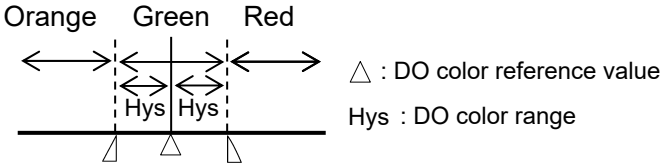
</td></tr>
</table>

Bar graph indication	When rAn1 (Transmission output 1) rAn2 (Transmission output 2) is selected in [Bar graph indication (p.46)], segments light in accordance with the output. Scale is -5 to 105%. Segments light from left to the right in accordance with the output. (e.g.) When the output is 50% 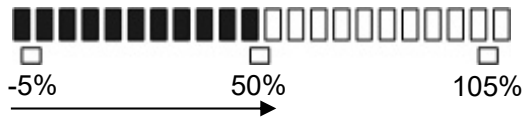 Light from left to the right in accordance with the output.
Error indication	For the following errors, the corresponding error code is indicated on the Temperature Display.

Error Code	Description	Occur-rence
Err0	Non-volatile IC memory error	Constantly
Err1	DO Sensor communication errors have occurred, or DO Sensor is not connected. After a command is sent to the DO Sensor, if there is no response for 500 ms, the command will be sent again. If no response occurs 4 times consecutively, this error code will be indicated. If communication status returns to normal, the unit will return to normal status. When this error code is displayed, the previous measured value is retained.	When measuring and calibrating
Err2	DO Sensor cap is not attached, or it is incorrectly attached.	
Err3	Calibration error (when input errors have occurred, or when calibration cannot be performed 30 minutes after starting calibration)	When calibrating
Err4	Normal measurement value cannot be obtained from the DO Sensor.	When measuring and calibrating

Other

Power consumption	Approx. 14 VA
Ambient temperature	0 to 50℃
Ambient humidity	35 to 85 %RH (Non-condensing)
Weight	Approx. 290 g
Accessories included	Unit label: 1 sheet Mounting brackets: 1 set Instruction manual: 1 copy When Serial communication (C5 option) is ordered: Wire harness C5J (0.2 m): 1 length Wire harness C0J (3 m): 1 length When EVT3, EVT4 outputs (Contact output 3, 4) (EVT3 option) are/is ordered: Wire harness HBJ (3 m): 2 lengths
Accessories sold separately	Terminal cover

9.1.2 Optional Specifications

Serial Communication (Option code: C5)

Serial communication		The following operations can be carried out from an external computer. (1) Reading and setting of various set values (2) Reading of DO concentration, DO % saturation, Oxygen partial pressure, temperature and status (3) Function change, adjustment (4) Reading and setting of user save area			
	Cable length	1.2 km (Max), Cable resistance value: Within 50 Ω (Terminators are not necessary, but if used, use 120 Ω minimum on both sides.)			
	Communication line	EIA RS-485			
	Communication method	Half-duplex communication			
	Communication speed	9600, 19200, 38400 bps (Selectable by keypad.)			
	Synchronization method	Start-stop synchronization			
	Code form	ASCII, Binary			
	Communication protocol	Shinko protocol, MODBUS ASCII, MODBUS RTU (Selectable by keypad.)			
	Data Bit/Parity	8 bits/No parity, 7 bits/No parity, 8 bits/Even, 7 bits/Even, 8 bits/Odd, 7 bits/Odd (Selectable by keypad.)			
	Stop bit	1, 2 (Selectable by keypad.)			
	Error correction	Command request repeat system			
	Error detection	Parity check, Checksum (Shinko protocol), LRC (MODBUS protocol ASCII), CRC-16 (MODBUS protocol RTU)			
	Data format	Communication Protocol	**Shinko Protocol**	**MODBUS ASCII**	**MODBUS RTU**
		Start bit	1	1	1
		Data bit	7	7 (8) Selectable	8
		Parity	Even	Even (No parity, Odd) Selectable	No parity (Even, Odd) Selectable
		Stop bit	1	1 (2) Selectable	1 (2) Selectable

EVT3, EVT4 Outputs (Contact output 3, 4) (Option code: EVT3)

EVT3, EVT4 outputs (Contact output 3, 4)	Same as EVT output (pp.76 to 78)

9.2 DO Sensor Specifications

Model	DOS-20
Power supply	12 to 36 V DC
Sensor cap replacement frequency	One (1) year after installing the DO Sensor (Recommended)
Sensor cap storage period	Two (2) years from the date of manufacture (When storing in the designated container) Storage temperature: 1 to 60℃
Measurement water temperature	0 to 50℃ (Not freezing)
Material	ABS
External dimensions	Approx. ϕ44 x 203 mm
Weight	Approx. 850 g (including 10 m cable)
Degree of protection	IP68 (Underwater type, Maximum depth of 200 m)
Accessories sold separately	DO Sensor attachment: DA-1 Sensor cap for replacement: DOS-CP Stanchion pole: PS-1 Fixing bracket for stanchion pole: PS-TK

10. Troubleshooting

If any malfunction occurs, refer to the following items after checking that power is being supplied to the AER-102-DO.

10.1 Indication

Problem	Possible Cause	Solution
The DO Display/ Temperature Display are unlit.	The time set in [Backlight time (p.45)] has passed.	If any key is pressed while displays are unlit, it will re-light. Set the backlight time to a suitable time-frame.
Indication of the DO Display/Temperature Display is unstable or irregular.	DO concentration calibration may not have finished.	Perform DO concentration calibration.
	Specification of the DO Sensor may not be suitable.	Replace the sensor with a suitable one.
	There may be equipment that interferes with or makes noise near the AER-102-DO.	Keep AER-102-DO clear of any potentially disruptive equipment.
ERR 1□ is flashing on the Temperature Display.	This shows that DO Sensor communication errors have occurred, or the DO Sensor is not connected.	Turn the power OFF, and check the wiring of the DO Sensor. If the DO Sensor is malfunctioning, repair or replace the sensor.
ERR2□ is flashing on the Temperature Display.	This occurs when sensor cap of the DO Sensor is not attached, or when it is incorrectly attached.	For correct attachment, refer to Section “3.5.4 Attaching the Sensor Cap” (p.15).
ERR3□ is flashing on the Temperature Display.	Calibration error	Remove dirt or air bubbles from the measurement section, and calibrate again. If errors occur again, repair or replace the DO Sensor. If salinity concentration correction has been performed, return the salinity concentration correction value to 0 PSU, and calibrate again.
ERR4□ is flashing on the Temperature Display.	Normal measured value cannot be obtained from the DO Sensor.	Repair or replace the DO Sensor. Contact our agency or us.
ERR0□ is flashing on the Temperature Display.	Internal memory is defective.	Contact our agency or us.

10.2 Key Operation

Problem	Possible Cause	Solution
Unable to set values. The values do not change by △, ▽ keys.	Lock 1 (Lock 1) or Lock2 (Lock 2) is selected in [Set value lock (p. 44)]. (When Lock 1 or Lock 2 is selected, the LOCK indicator is lit.)	Select -----(Unlock).
Unable to enter Forced cleansing mode.	CLEO (Cleansing output) is not selected in any of [EVT1 to EVT4 types (p. 32)].	Select CLEO (Cleansing output) in any of [EVT1 to EVT4 types (p.32)].
	Cleansing action is performing using the 'Cleansing time' and 'Standby after cleansing'.	Execute Forced cleansing after cleansing action is completed.
Unable to enter a calibration mode.	Lock 1 (Lock 1), Lock2 (Lock 2) or Lock3 (Lock 3) has been selected in [Set value lock (p.44)]. (When Lock 1, Lock 2 or Lock 3 is selected, the LOCK indicator is lit.)	Select -----(Unlock).
	CLEO (Cleansing output) has been selected in any of [EVT1 to EVT4 types (p. 32)], and cleansing action is performing using the 'Cleansing time' and 'Standby after cleansing'.	Perform calibration after cleansing action is completed.

11. Character Tables

The following shows our character tables. Use data column for your reference.

11.1 Setting Group List

Character	Setting Group	Reference Section, Page
FNc	DO Concentration Input Group	See Section 11.5 (p.86).
rRn1	Transmission Output 1 Group	See Section 11.6 (p.87).
rRn2	Transmission Output 2 Group	See Section 11.7 (p.88).
EVT1	EVT1 Action Group	See Section 11.8 (pp.89 to 91).
EVT2	EVT2 Action Group	See Section 11.9 (pp.92 to 94).
EVT3	EVT3 Action group	See Section 11.10 (pp.95 to 97).
EVT4	EVT4 Action Group	See Section 11.11 (pp.98 to 100).
comM	Communication Group	See Section 11.12 (p.101).
CLEn	Cleansing Group	See Section 11.13 (p.101).
bASE	Basic Function Group	See Section 11.14 (pp.102, 103).
SELF	Self-Check Group	See Section 11.15 (pp.103, 104).
CLR	Data Clear Group	See Section 11.16 (p.104).

11.2 DO Concentration Calibration

Character	Setting Item, Setting Range	Factory Default	Data
Measured value (*) -1-	**DO concentration 1-point calibration mode**		
Measured value (*) -2-	**DO concentration 2-point calibration mode**		
cRdF Concentration desired value	**Concentration option calibration mode** Setting range: 0.00 to 20.00 mg/L	0.00 mg/L	

(*) DO concentration measured value flashes.

11.3 Transmission output 1 Adjustment Mode

Character	Setting Item, Setting Range	Factory Default	Data
AJZ 1 0.00	**Transmission output 1 Zero adjustment value** Setting range: ±5.00% of Transmission output 1 span	0.00 mg/L	
AJ5 1 0.00	**Transmission output 1 Span adjustment value** Setting range: ±5.00% of Transmission output 1 span	0.00 mg/L	

11.4 Transmission output 2 Adjustment Mode

Character	Setting Item, Setting Range	Factory Default	Data
AJZ2 0.00	**Transmission output 2 Zero adjustment value** Setting range: ±5.00% of Transmission output 2 span	0.00 mg/L	
AJ52 0.00	**Transmission output 2 Span adjustment value** Setting range: ±5.00% of Transmission output 2 span	0.00 mg/L	

11.5 DO Concentration Input Group

Character	Setting Item, Setting Range	Factory Default	Data
dFcT 60	**Signal output response time** Setting range: 5 to 600 seconds	60 seconds	
SALT 0	**Salinity correction** Setting range: 0 to 42 PSU	0 PSU	
SEALV 0	**Altitude correction** Setting range: 0 to 5000 m	0 m	

11.6 Transmission Output 1 Group

Character	Setting Item, Setting Range	Factory Default	Data
tRo1 do	**Transmission output 1 type** do : DO concentration transmission WTEMP : Water temperature transmission doSAT : DO % saturation transmission WPRES : Oxygen partial pressure transmission MV 1 : EVT1 MV transmission MV2 : EVT2 MV transmission MV3 : EVT3 MV transmission (*) MV4 : EVT4 MV transmission (*)	DO concentration transmission	
tRLH1 20.00	**Transmission output 1 high limit** Setting range: DO concentration: Transmission output 1 low limit to 20.00 mg/L Water temperature: Transmission output 1 low limit to 50.0℃ DO % saturation: Transmission output 1 low limit to 200.0% Oxygen partial pressure: Transmission output 1 low limit to 150.0 kPa EVT1 to EVT4 MV: Transmission output 1 low limit to 100.0%	20.00 mg/L	
tRLL1 0.00	**Transmission output 1 low limit** Setting range: DO concentration: 0.00 mg/L to Transmission output 1 high limit Water temperature: 0.0℃ to Transmission output 1 high limit DO % saturation: 0.0% to Transmission output 1 high limit Oxygen partial pressure: 0.0 kPa to Transmission output 1 high limit EVT1 to EVT4 MV: 0.0% to Transmission output 1 high limit	0.00 mg/L	
tRc1 bEFH	**Transmission output 1 status when calibrating** bEFH: Last value HOLD HEFH: Set value HOLD (Outputs the value set in [Transmission output 1 value HOLD when calibrating].) PVH: Measured value (Outputs the measured value when calibrating DO concentration.)	Last value HOLD	
tR1E1 0.00	**Transmission output 1 value HOLD when calibrating** Setting range: DO concentration transmission: 0.00 to 20.00 mg/L Water temperature transmission: 0.0 to 50.0℃ DO % saturation transmission: 0.0 to 200.0% Oxygen partial pressure transmission: 0.0 to 150.0 kPa EVT1 to EVT4 MV transmission: 0.0 to 100.0%	0.00 mg/L	

(*) Available only when EVT3, EVT4 outputs (EVT3 option) are/is ordered.

11.7 Transmission Output 2 Group

Character	Setting Item, Setting Range	Factory Default	Data
tRo42 do	**Transmission output 2 type** do : DO concentration transmission WTEMP : Water temperature transmission doSAT : DO % saturation transmission WPRES : Oxygen partial pressure transmission MV 1 : EVT1 MV transmission MV2 : EVT2 MV transmission MV3 : EVT3 MV transmission (*) MV4 : EVT4 MV transmission (*)	DO concentration transmission	
tRLH2 20.00	**Transmission output 2 high limit** Setting range: DO concentration: Transmission output 2 low limit to 20.00 mg/L Water temperature: Transmission output 2 low limit to 50.0℃ DO % saturation: Transmission output 2 low limit to 200.0% Oxygen partial pressure: Transmission output 2 low limit to 150.0 kPa EVT1 MV to EVT4 MV: Transmission output 2 low limit to 100.0%	20.00 mg/L	
tRLL2 0.00	**Transmission output 2 low limit** Setting range: DO concentration: 0.00 mg/L to Transmission output 2 high limit Water temperature: 0.0℃ to Transmission output 2 high limit DO % saturation: 0.0% to Transmission output 2 high limit Oxygen partial pressure: 0.0 kPa to Transmission output 2 high limit EVT1 MV to EVT4 MV: 0.0% to Transmission output 2 high limit	0.00 mg/L	
tRc42 bEFH	**Transmission output 2 status when calibrating** bEFH: Last value HOLD HOLD: Set value HOLD (Outputs the value set in [Transmission output 2 value HOLD when calibrating].) PVH: Measured value (Outputs the measured value when calibrating DO concentration.)	Last value HOLD	
tR4E2 0.00	**Transmission output 2 value HOLD when calibrating** Setting range: DO concentration transmission: 0.00 to 20.00 mg/L Water temperature transmission: 0.0 to 50.0℃ DO % saturation transmission: 0.0 to 200.0% Oxygen partial pressure transmission: 0.0 to 150.0 kPa EVT1 MV to EVT4 MV transmission: 0.0 to 100.0%	0.00 mg/L	

(*) Available only when EVT3, EVT4 outputs (EVT3 option) are/is ordered.

11.8 EVT1 Action Group

Character	Setting Item, Setting Range		Factory Default	Data
EVT 1F -----	**EVT1 type** -----: No action do_H□ : DO concentration input high limit action do_L□ : DO concentration input low limit action WTMPH : Water temperature input high limit action WTMPL : Water temperature input low limit action do%_H : DO % saturation input high limit action do%_L : DO % saturation input low limit action WPR%H : Oxygen partial pressure input high limit action WPR%L : Oxygen partial pressure input low limit action T_cAP : Sensor cap replacement timer cLEC□ : Cleansing output do_HL : DO concentration input High/Low limits independent action TMPHL : Water temperature input High/Low limits independent action do%HL : DO % saturation input High/Low limits independent action WPRHL : Oxygen partial pressure input High/Low limits independent action		No action	
EV% 1□ □□0.00	**EVT1 value**	DO concentration input: 0.00 mg/L Water temperature input: 0.0℃ DO % saturation input: 0.0% Oxygen partial pressure input: 0.0 kPa		
	DO concentration input: 0.00 to 20.00 mg/L Water temperature input: 0.0 to 50.0℃ DO % saturation input: 0.0 to 200.0% Oxygen partial pressure input: 0.0 to 150.0 kPa			
EP 1□□ □□0.00	**EVT1 proportional band**	DO concentration input: 0.00 mg/L Water temperature input: 0.0℃ DO % saturation input: 0.0% Oxygen partial pressure input: 0.0 kPa		
	DO concentration input: 0.00 to 20.00 mg/L Water temperature input: 0.0 to 50.0℃ DO % saturation input: 0.0 to 200.0% Oxygen partial pressure input: 0.0 to 150.0 kPa			
E IR%r □□0.00	**EVT1 reset**	DO concentration input: 0.00 mg/L Water temperature input: 0.0℃ DO % saturation input: 0.0% Oxygen partial pressure input: 0.0 kPa		
	DO concentration input: -2.00 to 2.00 mg/L Water temperature input: -5.0 to 5.0℃ DO % saturation input: -20.0 to 20.0% Oxygen partial pressure input: -15.0 to 15.0 kPa			
E Idl F %dl F□	**EVT1 hysteresis type** cdl F□ : Medium Value %dl F□ : Reference Value		Reference Value	

Character	Setting Item, Setting Range		Factory Default	Data
E 1dFo □□0.01	**EVT1 ON side** Setting range: DO concentration input: 0.00 to 4.00 mg/L Water temperature input: 0.0 to 10.0℃ DO % saturation input: 0.0 to 40.0% Oxygen partial pressure input: 0.0 to 30.0 kPa	DO concentration input: 0.01 mg/L Water temperature input: 1.0℃ DO % saturation input: 0.1% Oxygen partial pressure input: 0.1 kPa		
E 1dFU □□0.01	**EVT1 OFF side** Setting range: DO concentration input: 0.00 to 4.00 mg/L Water temperature input: 0.0 to 10.0℃ DO % saturation input: 0.0 to 40.0% Oxygen partial pressure input: 0.0 to 30.0 kPa	DO concentration input: 0.01 mg/L Water temperature input: 1.0℃ DO % saturation input: 0.1% Oxygen partial pressure input: 0.1 kPa		
E 1oNr □□□□0	**EVT1 ON delay time** Setting range: 0 to 10000 seconds		0 seconds	
E 1oFr □□□□0	**EVT1 OFF delay time** Setting range: 0 to 10000 seconds		0 seconds	
E 1c□□ □□□30	**EVT1 proportional cycle** Setting range: 1 to 300 seconds		30 seconds	
E 1oLH □□ 100	**EVT1 output high limit** Setting range: EVT1 output low limit to 100%		100%	
E 1oLL □□□□0	**EVT1 output low limit** Setting range: 0% to EVT1 output high limit		0%	
ooNr 1 □□□□0	**Output ON Time when EVT1 Output ON** Setting range: 0 to 10000 seconds		0 seconds	
ooFr 1 □□□□0	**Output OFF Time when EVT1 Output ON** Setting range: 0 to 10000 seconds		0 seconds	
E 1_L□ □□0.00	**EVT1 High/Low limits independent lower side value** Setting range: DO concentration input: 0.00 to 20.00 mg/L Water temperature input: 0.0 to 50.0℃ DO % saturation input: 0.0 to 200.0% Oxygen partial pressure input: 0.0 to 150.0 kPa	DO concentration input: 0.00 mg/L Water temperature input: 0.0℃ DO % saturation input: 0.0% Oxygen partial pressure input: 0.0 kPa		

Character	Setting Item, Setting Range	Factory Default	Data
E 1_H□ □□0.00	**EVT1 High/Low limits independent upper side value** DO concentration input: 0.00 mg/L Water temperature input: 0.0℃ DO % saturation input: 0.0% Oxygen partial pressure input: 0.0 kPa Setting range: DO concentration input: 0.00 to 20.00 mg/L Water temperature input: 0.0 to 50.0℃ DO % saturation input: 0.0 to 200.0% Oxygen partial pressure input: 0.0 to 150.0 kPa		
E 1_HY □□0.01	**EVT1 hysteresis** DO concentration input: 0.01 mg/L Water temperature input: 1.0℃ DO % saturation input: 0.1% Oxygen partial pressure input: 0.1 kPa Setting range: DO concentration input: 0.01 to 2.00 mg/L Water temperature input: 1.0 to 5.0℃ DO % saturation input: 0.1 to 20.0% Oxygen partial pressure input: 0.1 to 15.0 kPa		

11.9 EVT2 Action Group

Character	Setting Item, Setting Range	Factory Default	Data
EVT2F -----	**EVT2 type** -----: No action do_H□ : DO concentration input high limit action do_L□ : DO concentration input low limit action WTMPH : Water temperature input high limit action WTMPL : Water temperature input low limit action do%_H : DO % saturation input high limit action do%_L : DO % saturation input low limit action WPR%H : Oxygen partial pressure input high limit action WPR%L : Oxygen partial pressure input low limit action T_cAP : Sensor cap replacement timer cLEC□ : Cleansing output do_HL : DO concentration input High/Low limits independent action TMPHL : Water temperature input High/Low limits independent action do%HL : DO % saturation input High/Low limits independent action WPRHL : Oxygen partial pressure input High/Low limits independent action	No action	
E%V2□ □□0.00	**EVT2 value** DO concentration input: 0.00 to 20.00 mg/L Water temperature input: 0.0 to 50.0℃ DO % saturation input: 0.0 to 200.0% Oxygen partial pressure input: 0.0 to 150.0 kPa	DO concentration input: 0.00 mg/L Water temperature input: 0.0℃ DO % saturation input: 0.0% Oxygen partial pressure input: 0.0 kPa	
EP2□□ □□0.00	**EVT2 proportional band** DO concentration input: 0.00 to 20.00 mg/L Water temperature input: 0.0 to 50.0℃ DO % saturation input: 0.0 to 200.0% Oxygen partial pressure input: 0.0 to 150.0 kPa	DO concentration input: 0.00 mg/L Water temperature input: 0.0℃ DO % saturation input: 0.0% Oxygen partial pressure input: 0.0 kPa	
E2R%T □□0.00	**EVT2 reset** DO concentration input: -2.00 to 2.00 mg/L Water temperature input: -5.0 to 5.0℃ DO % saturation input: -20.0 to 20.0% Oxygen partial pressure input: -15.0 to 15.0 kPa	DO concentration input: 0.00 mg/L Water temperature input: 0.0℃ DO % saturation input: 0.0% Oxygen partial pressure input: 0.0 kPa	
E2dIF %dIF□	**EVT2 hysteresis type** cdIF□ : Medium Value %dIF□ : Reference Value	Reference Value	

Character	Setting Item, Setting Range	Factory Default	Data
E2dFo 0.01	**EVT2 ON side** DO concentration input: 0.01 mg/L Water temperature input: 1.0℃ DO % saturation input: 0.1% Oxygen partial pressure input: 0.1 kPa Setting range: DO concentration input: 0.00 to 4.00 mg/L Water temperature input: 0.0 to 10.0℃ DO % saturation input: 0.0 to 40.0% Oxygen partial pressure input: 0.0 to 30.0 kPa		
E2dFU 0.01	**EVT2 OFF side** DO concentration input: 0.01 mg/L Water temperature input: 1.0℃ DO % saturation input: 0.1% Oxygen partial pressure input: 0.1 kPa Setting range: DO concentration input: 0.00 to 4.00 mg/L Water temperature input: 0.0 to 10.0℃ DO % saturation input: 0.0 to 40.0% Oxygen partial pressure input: 0.0 to 30.0 kPa		
E2oNr 0	**EVT2 ON delay time** Setting range: 0 to 10000 seconds	0 seconds	
E2oFr 0	**EVT2 OFF delay time** Setting range: 0 to 10000 seconds	0 seconds	
E2c 30	**EVT2 proportional cycle** Setting range: 1 to 300 seconds	30 seconds	
E2oLH 100	**EVT2 output high limit** Setting range: EVT2 output low limit to 100%	100%	
E2oLL 0	**EVT2 output low limit** Setting range: 0% to EVT2 output high limit	0%	
ooNr2 0	**Output ON Time when EVT2 Output ON** Setting range: 0 to 10000 seconds	0 seconds	
ooFr2 0	**Output OFF Time when EVT2 Output ON** Setting range: 0 to 10000 seconds	0 seconds	
E2_L 0.00	**EVT2 High/Low limits independent lower side value** DO concentration input: 0.00 mg/L Water temperature input: 0.0℃ DO % saturation input: 0.0% Oxygen partial pressure input: 0.0 kPa Setting range: DO concentration input: 0.00 to 20.00 mg/L Water temperature input: 0.0 to 50.0℃ DO % saturation input: 0.0 to 200.0% Oxygen partial pressure input: 0.0 to 150.0 kPa		

Character	Setting Item, Setting Range	Factory Default	Data
E2_H□ □□0.00	**EVT2 High/Low limits independent upper side value** DO concentration input: 0.00 mg/L Water temperature input: 0.0℃ DO % saturation input: 0.0% Oxygen partial pressure input: 0.0 kPa Setting range: DO concentration input: 0.00 to 20.00 mg/L Water temperature input: 0.0 to 50.0℃ DO % saturation input: 0.0 to 200.0% Oxygen partial pressure input: 0.0 to 150.0 kPa		
E2_HY □□0.01	**EVT2 hysteresis** DO concentration input: 0.01 mg/L Water temperature input: 1.0℃ DO % saturation input: 0.1% Oxygen partial pressure input: 0.1 kPa Setting range: DO concentration input: 0.01 to 2.00 mg/L Water temperature input: 1.0 to 5.0℃ DO % saturation input: 0.1 to 20.0% Oxygen partial pressure input: 0.1 to 15.0 kPa		

11.10 EVT3 Action Group

Character	Setting Item, Setting Range	Factory Default	Data
EVT3F -----	**EVT3 type** -----: No action do_H□ : DO concentration input high limit action do_L□ : DO concentration input low limit action WTMPH : Water temperature input high limit action WTMPL : Water temperature input low limit action do%_H : DO % saturation input high limit action do%_L : DO % saturation input low limit action WPR%H : Oxygen partial pressure input high limit action WPR%L : Oxygen partial pressure input low limit action T_cAP : Sensor cap replacement timer cLEO□ : Cleansing output do_HL : DO concentration input High/Low limits independent action TMPHL : Water temperature input High/Low limits independent action do%HL : DO % saturation input High/Low limits independent action WPRHL : Oxygen partial pressure input High/Low limits independent action	No action	
E%V3□ □□0.00	**EVT3 value** DO concentration input: 0.00 to 20.00 mg/L Water temperature input: 0.0 to 50.0℃ DO % saturation input: 0.0 to 200.0% Oxygen partial pressure input: 0.0 to 150.0 kPa	DO concentration input: 0.00 mg/L Water temperature input: 0.0℃ DO % saturation input: 0.0% Oxygen partial pressure input: 0.0 kPa	
EP3□□ □□0.00	**EVT3 proportional band** DO concentration input: 0.00 to 20.00 mg/L Water temperature input: 0.0 to 50.0℃ DO % saturation input: 0.0 to 200.0% Oxygen partial pressure input: 0.0 to 150.0 kPa	DO concentration input: 0.00 mg/L Water temperature input: 0.0℃ DO % saturation input: 0.0% Oxygen partial pressure input: 0.0 kPa	
E3R%T □□0.00	**EVT3 reset** DO concentration input: -2.00 to 2.00 mg/L Water temperature input: -5.0 to 5.0℃ DO % saturation input: -20.0 to 20.0% Oxygen partial pressure input: -15.0 to 15.0 kPa	DO concentration input: 0.00 mg/L Water temperature input: 0.0℃ DO % saturation input: 0.0% Oxygen partial pressure input: 0.0 kPa	
E3dIF %dIF□	**EVT3 hysteresis type** cdIF□ : Medium Value %dIF□ : Reference Value	Reference Value	

Character	Setting Item, Setting Range	Factory Default	Data
E3dFo 0.01	**EVT3 ON side** DO concentration input: 0.01 mg/L Water temperature input: 1.0℃ DO % saturation input: 0.1% Oxygen partial pressure input: 0.1 kPa Setting range: DO concentration input: 0.00 to 4.00 mg/L Water temperature input: 0.0 to 10.0℃ DO % saturation input: 0.0 to 40.0% Oxygen partial pressure input: 0.0 to 30.0 kPa		
E3dFU 0.01	**EVT3 OFF side** DO concentration input: 0.01 mg/L Water temperature input: 1.0℃ DO % saturation input: 0.1% Oxygen partial pressure input: 0.1 kPa Setting range: DO concentration input: 0.00 to 4.00 mg/L Water temperature input: 0.0 to 10.0℃ DO % saturation input: 0.0 to 40.0% Oxygen partial pressure input: 0.0 to 30.0 kPa		
E3oNr 0	**EVT3 ON delay time** Setting range: 0 to 10000 seconds	0 seconds	
E3oFr 0	**EVT3 OFF delay time** Setting range: 0 to 10000 seconds	0 seconds	
E3c 30	**EVT3 proportional cycle** Setting range: 1 to 300 seconds	30 seconds	
E3oLH 100	**EVT3 output high limit** Setting range: EVT3 output low limit to 100%	100%	
E3oLL 0	**EVT3 output low limit** Setting range: 0% to EVT3 output high limit	0%	
ooNr3 0	**Output ON Time when EVT3 Output ON** Setting range: 0 to 10000 seconds	0 seconds	
ooFr3 0	**Output OFF Time when EVT3 Output ON** Setting range: 0 to 10000 seconds	0 seconds	
E3_L 0.00	**EVT3 High/Low limits independent lower side value** DO concentration input: 0.00 mg/L Water temperature input: 0.0℃ DO % saturation input: 0.0% Oxygen partial pressure input: 0.0 kPa Setting range: DO concentration input: 0.00 to 20.00 mg/L Water temperature input: 0.0 to 50.0℃ DO % saturation input: 0.0 to 200.0% Oxygen partial pressure input: 0.0 to 150.0 kPa		

Character	Setting Item, Setting Range	Factory Default	Data
E3_H□ □□0.00	**EVT3 High/Low limits independent upper side value** DO concentration input: 0.00 mg/L Water temperature input: 0.0℃ DO % saturation input: 0.0% Oxygen partial pressure input: 0.0 kPa Setting range: DO concentration input: 0.00 to 20.00 mg/L Water temperature input: 0.0 to 50.0℃ DO % saturation input: 0.0 to 200.0% Oxygen partial pressure input: 0.0 to 150.0 kPa		
E3_HY □□0.01	**EVT3 hysteresis** DO concentration input: 0.01 mg/L Water temperature input: 1.0℃ DO % saturation input: 0.1% Oxygen partial pressure input: 0.1 kPa Setting range: DO concentration input: 0.01 to 2.00 mg/L Water temperature input: 1.0 to 5.0℃ DO % saturation input: 0.1 to 20.0% Oxygen partial pressure input: 0.1 to 15.0 kPa		

11.11 EVT4 Action Group

Character	Setting Item, Setting Range		Factory Default	Data
EVT4F -----	**EVT4 type**		No action	
	-----: No action do_H□: DO concentration input high limit action do_L□: DO concentration input low limit action WTMPH: Water temperature input high limit action WTMPL: Water temperature input low limit action do%_H: DO % saturation input high limit action do%_L: DO % saturation input low limit action WPR%H: Oxygen partial pressure input high limit action WPR%L: Oxygen partial pressure input low limit action T_cAP: Sensor cap replacement timer cLEO□: Cleansing output do_HL: DO concentration input High/Low limits independent action TMPHL: Water temperature input High/Low limits independent action do%HL: DO % saturation input High/Low limits independent action WPRHL: Oxygen partial pressure input High/Low limits independent action			
E%V4□ □□0.00	**EVT4 value**	DO concentration input: 0.00 mg/L Water temperature input: 0.0℃ DO % saturation input: 0.0% Oxygen partial pressure input: 0.0 kPa		
	DO concentration input: 0.00 to 20.00 mg/L Water temperature input: 0.0 to 50.0℃ DO % saturation input: 0.0 to 200.0% Oxygen partial pressure input: 0.0 to 150.0 kPa			
EP4□□ □□0.00	**EVT4 proportional band**	DO concentration input: 0.00 mg/L Water temperature input: 0.0℃ DO % saturation input: 0.0% Oxygen partial pressure input: 0.0 kPa		
	DO concentration input: 0.00 to 20.00 mg/L Water temperature input: 0.0 to 50.0℃ DO % saturation input: 0.0 to 200.0% Oxygen partial pressure input: 0.0 to 150.0 kPa			
E4RST □□0.00	**EVT4 reset**	DO concentration input: 0.00 mg/L Water temperature input: 0.0℃ DO % saturation input: 0.0% Oxygen partial pressure input: 0.0 kPa		
	DO concentration input: -2.00 to 2.00 mg/L Water temperature input: -5.0 to 5.0℃ DO % saturation input: -20.0 to 20.0% Oxygen partial pressure input: -15.0 to 15.0 kPa			
E4dIF %dIF□	**EVT4 hysteresis type**		Reference Value	
	cdIF□: Medium Value %dIF□: Reference Value			

Character	Setting Item, Setting Range	Factory Default	Data
E4dFo □□0.01	**EVT4 ON side** DO concentration input: 0.01 mg/L Water temperature input: 1.0℃ DO % saturation input: 0.1% Oxygen partial pressure input: 0.1 kPa Setting range: DO concentration input: 0.00 to 4.00 mg/L Water temperature input: 0.0 to 10.0℃ DO % saturation input: 0.0 to 40.0% Oxygen partial pressure input: 0.0 to 30.0 kPa		
E4dFU □□0.01	**EVT4 OFF side** DO concentration input: 0.01 mg/L Water temperature input: 1.0℃ DO % saturation input: 0.1% Oxygen partial pressure input: 0.1 kPa Setting range: DO concentration input: 0.00 to 4.00 mg/L Water temperature input: 0.0 to 10.0℃ DO % saturation input: 0.0 to 40.0% Oxygen partial pressure input: 0.0 to 30.0 kPa		
E4oNr □□□□0	**EVT4 ON delay time** Setting range: 0 to 10000 seconds	0 seconds	
E4oFr □□□□0	**EVT4 OFF delay time** Setting range: 0 to 10000 seconds	0 seconds	
E4c□□ □□□30	**EVT4 proportional cycle** Setting range: 1 to 300 seconds	30 seconds	
E4oLH □□ 100	**EVT4 output high limit** Setting range: EVT4 output low limit to 100%	100%	
E4oLL □□□□0	**EVT4 output low limit** Setting range: 0% to EVT4 output high limit	0%	
ooNr4 □□□□0	**Output ON Time when EVT4 Output ON** Setting range: 0 to 10000 seconds	0 seconds	
ooFr4 □□□□0	**Output OFF Time when EVT4 Output ON** Setting range: 0 to 10000 seconds	0 seconds	
E4_L□ □□0.00	**EVT4 High/Low limits independent lower side value** DO concentration input: 0.00 mg/L Water temperature input: 0.0℃ DO % saturation input: 0.0% Oxygen partial pressure input: 0.0 kPa Setting range: DO concentration input: 0.00 to 20.00 mg/L Water temperature input: 0.0 to 50.0℃ DO % saturation input: 0.0 to 200.0% Oxygen partial pressure input: 0.0 to 150.0 kPa		

Character	Setting Item, Setting Range	Factory Default	Data
E4_H□ □□0.00	**EVT4 High/Low limits independent upper side value** DO concentration input: 0.00 mg/L Water temperature input: 0.0℃ DO % saturation input: 0.0% Oxygen partial pressure input: 0.0 kPa Setting range: DO concentration input: 0.00 to 20.00 mg/L Water temperature input: 0.0 to 50.0℃ DO % saturation input: 0.0 to 200.0% Oxygen partial pressure input: 0.0 to 150.0 kPa		
E4_HY □□0.01	**EVT4 hysteresis** DO concentration input: 0.01 mg/L Water temperature input: 1.0℃ DO % saturation input: 0.1% Oxygen partial pressure input: 0.1 kPa Setting range: DO concentration input: 0.01 to 2.00 mg/L Water temperature input: 1.0 to 5.0℃ DO % saturation input: 0.1 to 20.0% Oxygen partial pressure input: 0.1 to 15.0 kPa		

11.12 Communication Group

Available when Serial communication (C5 option) is ordered.

Character	Setting Item, Setting Range	Factory Default	Data
cMnL NoML	**Communication protocol** NoML : Shinko protocol ModA : MODBUS ASCII mode ModR : MODBUS RTU mode	Shinko protocol	
cMNo 0	**Instrument number** Setting range: 0 to 95	0	
cMbP 96	**Communication speed** 96 : 9600 bps 192 : 19200 bps 384 : 38400 bps	9600 bps	
cMFt 7EvN	**Data bit/Parity** 8NoN : 8 bits/No parity 7NoN : 7 bits/No parity 8EvN : 8 bits/Even 7EvN : 7 bits/Even 8odd : 8 bits/Odd 7odd : 7 bits/Odd	7 bits/Even	
cMbT 1	**Stop bit** 1 : 1 bit 2 : 2 bits	1 bit	

11.13 Cleansing Group

Character	Setting Item, Setting Range	Factory Default	Data
cLnTM 30	**Cleansing time** Setting range: 10 to 120 seconds	30 seconds	
cLncy oFF	**Cleansing inactive interval** Setting range: oFF (None), 10 to 240 minutes	OFF (None)	
cLnIt 0	**Standby after cleansing** Setting range: 0 to 60 seconds	0 seconds	

11.14 Basic Function Group

Character	Setting Item, Setting Range	Factory Default	Data
LocK ------	**Set value lock** ------ : Unlock LocK 1 : Lock 1 LocK2 : Lock 2 LocK3 : Lock 3	Unlock	
bKLT ALL	**Backlight selection** ALL : All are backlit. do : DO Display is backlit. tEM : Temperature Display is backlit. Ac : Action indicators are backlit. dotM : DO Display + Temperature Display are backlit. doAc : DO Display + Action indicators are backlit. tEMAc : Temperature Display + Action indicators are backlit.	All are backlit.	
coLR REd	**DO color** GRN : Green REd : Red oRG : Orange doGR : DO color changes continuously.	Red	
cLP 0.10	**DO color reference value** Setting range: 0.00 to 20.00 mg/L	0.10 mg/L	
cLRG 0.01	**DO color range** Setting range: 0.00 to 20.00 mg/L	0.01 mg/L	
dPTM 0	**Backlight time** Setting range: 0 to 99 minutes	0 minutes	
bERtL ------	**Bar graph indication** ------ : No indication tRoT 1 : Transmission output 1 tRoT2 : Transmission output 2	No indication	
INERR oFF	**EVT output when input errors occur** oN : Enabled oFF : Disabled	Disabled	
Evt 1 365	**EVT1 value** Setting range: 0 to 1095 days	365 days	
EoNT 1 0	**EVT1 ON delay time** Setting range: 0 to 10000 seconds	0 seconds	
EoFT 1 0	**EVT1 OFF delay time** Setting range: 0 to 10000 seconds	0 seconds	
Evt2 365	**EVT2 value** Setting range: 0 to 1095 days	365 days	
EoNT2 0	**EVT2 ON delay time** Setting range: 0 to 10000 seconds	0 seconds	

Character	Setting Item, Setting Range	Factory Default	Data
EoFT2 □□□□0	**EVT2 OFF delay time** Setting range: 0 to 10000 seconds	0 seconds	
EVN3□ □□365	**EVT3 value** Setting range: 0 to 1095 days	365 days	
EoNT3 □□□□0	**EVT3 ON delay time** Setting range: 0 to 10000 seconds	0 seconds	
EoFT3 □□□□0	**EVT3 OFF delay time** Setting range: 0 to 10000 seconds	0 seconds	
EVN4□ □□365	**EVT4 value** Setting range: 0 to 1095 days	365 days	
EoNT4 □□□□0	**EVT4 ON delay time** Setting range: 0 to 10000 seconds	0 seconds	
EoFT4 □□□□0	**EVT4 OFF delay time** Setting range: 0 to 10000 seconds	0 seconds	
RETM□ □□365	**Sensor cap replacement timer remainder** Setting range: 0 to 1095 days	365 days	

11.15 Self-Check Group

Character	Mode	
All lit	**All lit mode**	
Individually lit	**Individual lit mode**	
KEY□□ NoNE□	**Key input mode**	
	Temperature Display	**Key Input**
	NoNE□	When no key is pressed
	UP□□□	When the △ key is pressed.
	doWN□	When the ▽ key is pressed.
	db□□□	When 2 or more keys are pressed simultaneously.
oUT□□ oFF□□	**Output mode**	
	Temperature Display	**Output**
	oFF□□	All EVT outputs, Self-check output: OFF Transmission output 1 and 2: 4 mA DC
	EVT 1□	EVT1 output ON
	EVT2□	EVT2 output ON
	EVT3□	EVT3 output ON
	EVT4□	EVT4 output ON
	SELF□	Self-check output ON
	TRoT 1	Transmission output 1: 20 mA DC
	TRoT2	Transmission output 2: 20 mA DC

Character	Mode	
do□□□ Measured value	**Input mode**	
	DO Display	**Temperature Display**
	do□□□	DO concentration measured value
	WTEMP	Water temperature measured value
	doSAT	DO % saturation measured value
	WPRES	Oxygen partial pressure measured value
	NoSAP□	Sensor cap serial number

11.16 Data Clear Group

Character	Setting Item, Setting Range	Factory Default	Data
CLRSL CAL□□	**Data clear selection** CAL□□ : Calibration value SET□□ : Set value	Calibration value	
CLR□□ No□□□	**Data clear Stop/Perform** No□□□ : Data clear Stop YES□□ : Data clear Perform	Data clear Stop	

11.17 Error Codes

For the following errors, the corresponding error code is indicated on the Temperature Display.

Error Code	Description	Occurrence
ERR0□	Non-volatile IC memory error	Constantly
ERR 1□	DO Sensor communication errors have occurred, or DO Sensor is not connected. After a command is sent to the DO Sensor, if there is no response for 500 ms, the command will be sent again. If no response occurs 4 times consecutively, this error code will be displayed. If communication status returns to normal, the unit will return to normal status. When this error code is indicated, the previous measurement value is retained.	When measuring and calibrating
ERR2□	Sensor cap of the DO Sensor is not attached, or it is incorrectly attached.	
ERR3□	Calibration error (when input errors have occurred, or when calibration cannot be performed 30 minutes after starting calibration)	When calibrating
ERR4□	Normal measurement value cannot be obtained from the DO Sensor.	When measuring and calibrating

12. Key Operation Flowchart

Abbreviations:
Meas.value: Measured value, DO: Dissolved oxygen,
Temp: Temperature, Calib: Calibration, Adjust: Adjustment,
C.desired value: Concentration desired value, Trans: Transmission

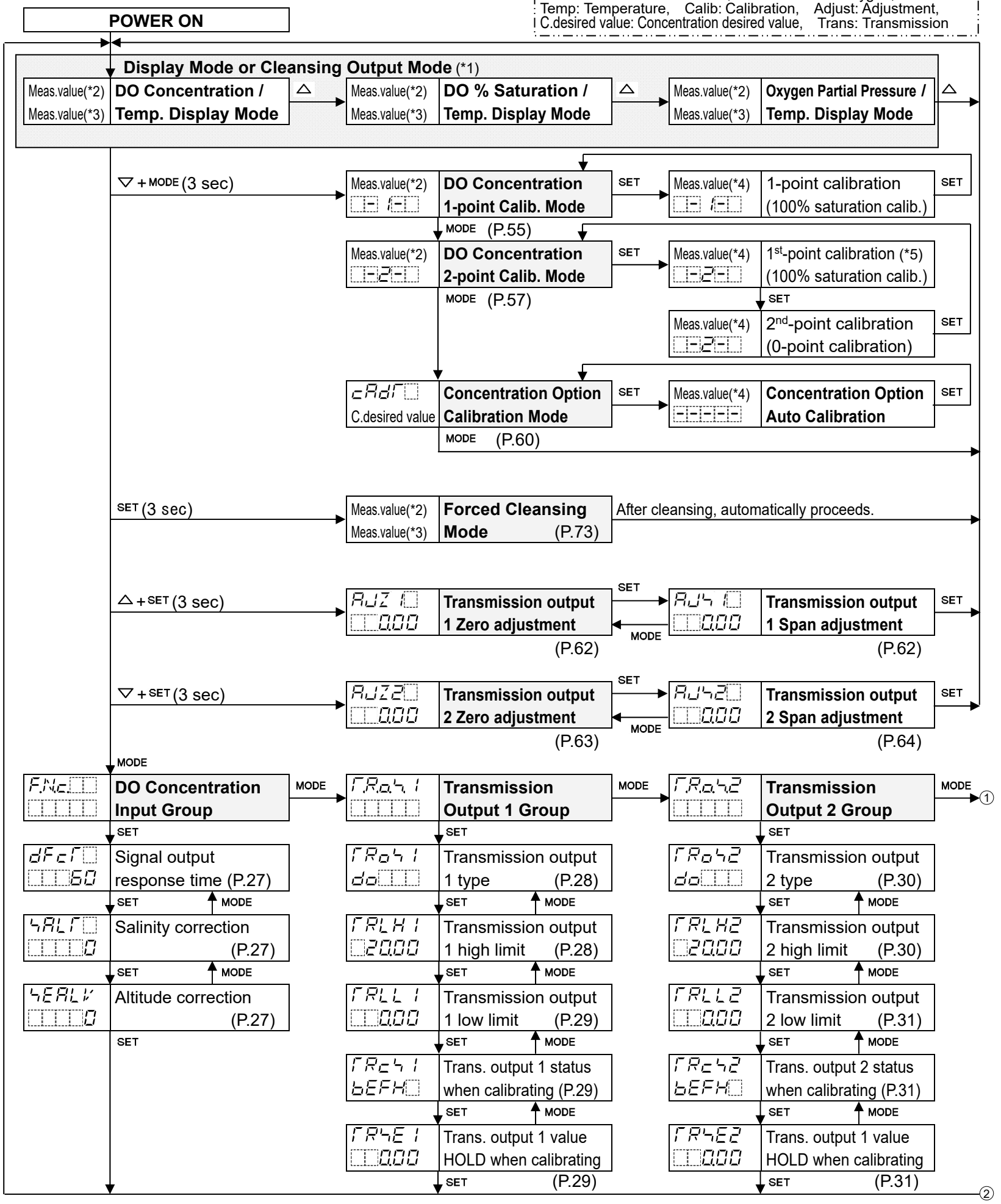

● About Setting Item

dFCT 60	Signal output response time (P.27)
EVT.a3	**EVT3 Action Group**

• **Upper left**: DO Display: Indicates the setting item characters. • **Lower left**: Temperature Display: Indicates the factory default. • **Right side**: Indicates the setting item and reference page.

Setting item in shaded section will be displayed only when the corresponding option is ordered.

● About Key Operation

- △, MODE, SET: Press the △, MODE or SET key. The unit will proceed to the next setting item, illustrated by an arrow.
- ▽ + MODE (3 sec): Press and hold the ▽ and MODE keys (in that order) together for 3 seconds. The unit will proceed to the next mode.
- SET (3 sec), MODE (3 sec): Press and hold the SET or MODE key for 3 seconds. The unit will proceed to the next mode.
- △ + SET (3 sec): Press and hold the △ and SET keys (in that order) together for 3 seconds. The unit will proceed to the next mode.
- ▽ + SET (3 sec): Press and hold the ▽ and SET keys (in that order) together for 3 seconds. The unit will proceed to the next mode.
- To set each item, use the △ or ▽ key, and register the set value with the SET key.
- If the MODE key is pressed for 3 seconds at any setting item, the unit will revert to Display Mode or Cleansing Output Mode.

Abbreviation:
H/L: High/Low limits

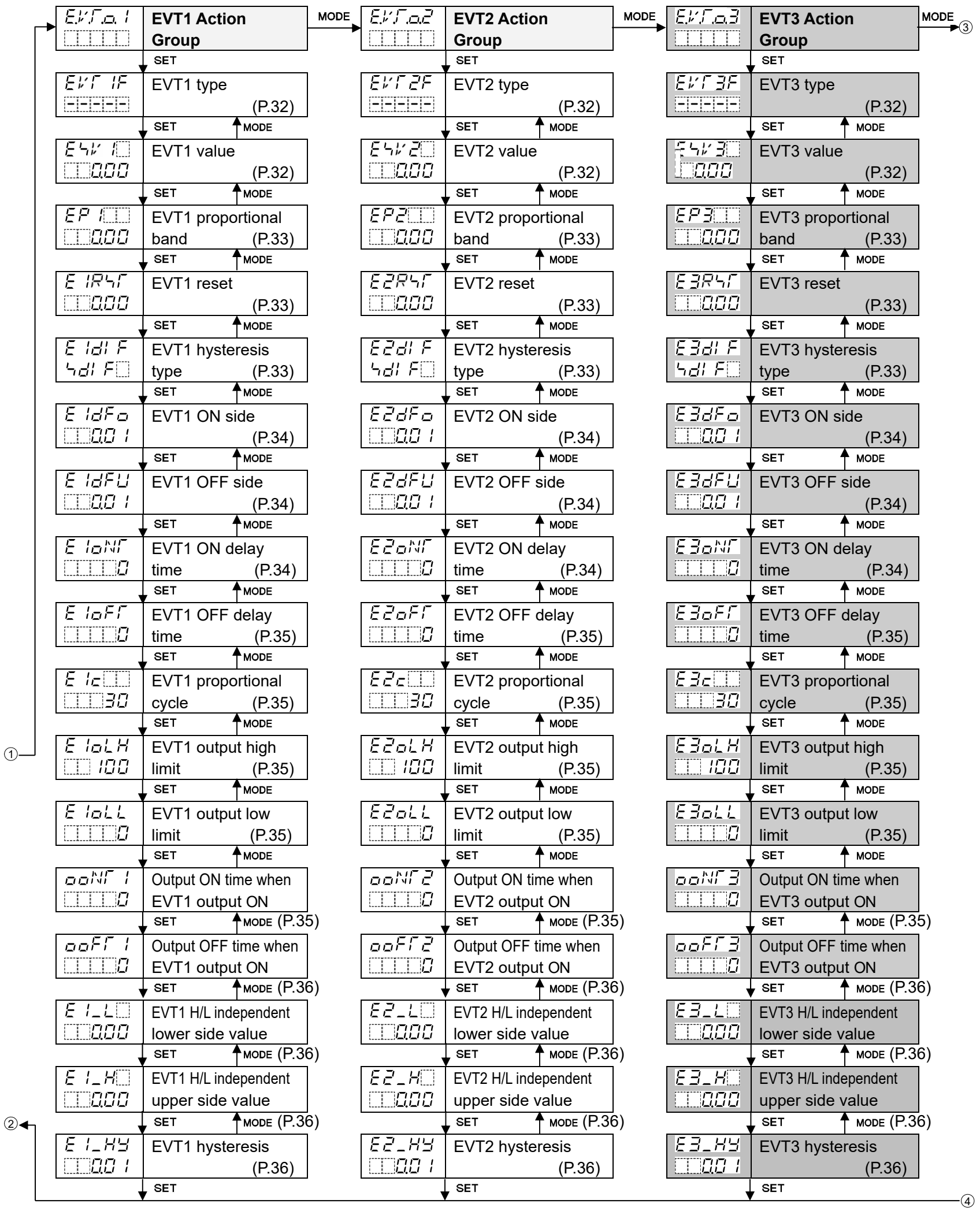

(*1) In Cleansing Output Mode, the measured value (DO concentration, DO % saturation, Oxygen partial pressure, temperature) is held during cleansing action (using 'Cleansing time' and 'Standby after cleansing').

(*2) Indicates the measured value of DO concentration, DO % saturation or Oxygen partial pressure.

(*3) Indicates temperature measured value.

(*4) During calibration, DO concentration measured value flashes.

(*5) If errors occur during 1st-point calibration (100% saturation calibration) in 2-point Calibration Mode, the unit will revert to Display Mode or Cleansing Output Mode by pressing the MODE or SET key.

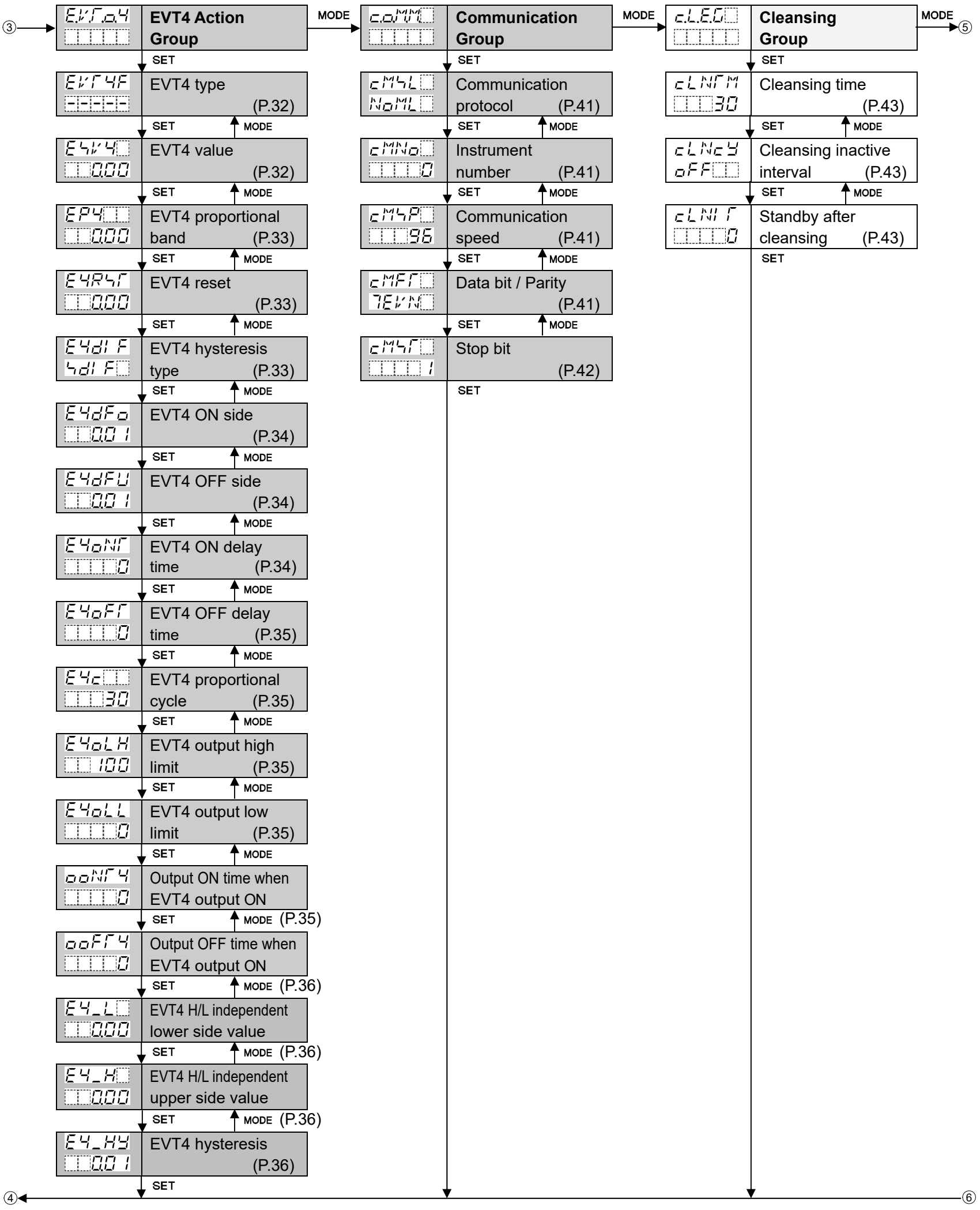

(*6) Indicates DO concentration measured value.

(*7) Depending on the selection in [Data clear Stop/Perform], the unit operates as follows.

If 'Data clear Stop' is selected, data will not be cleared. The unit will revert to the mode prior to 'Data clear Stop' (either Display Mode or Cleansing Output Mode).

If 'Data clear Perform' is selected, data will be cleared. The unit will revert to the mode prior to 'Data clear Perform' (either Display Mode or Cleansing Output Mode). (While data is being cleared, all indications are momentarily unlit.)

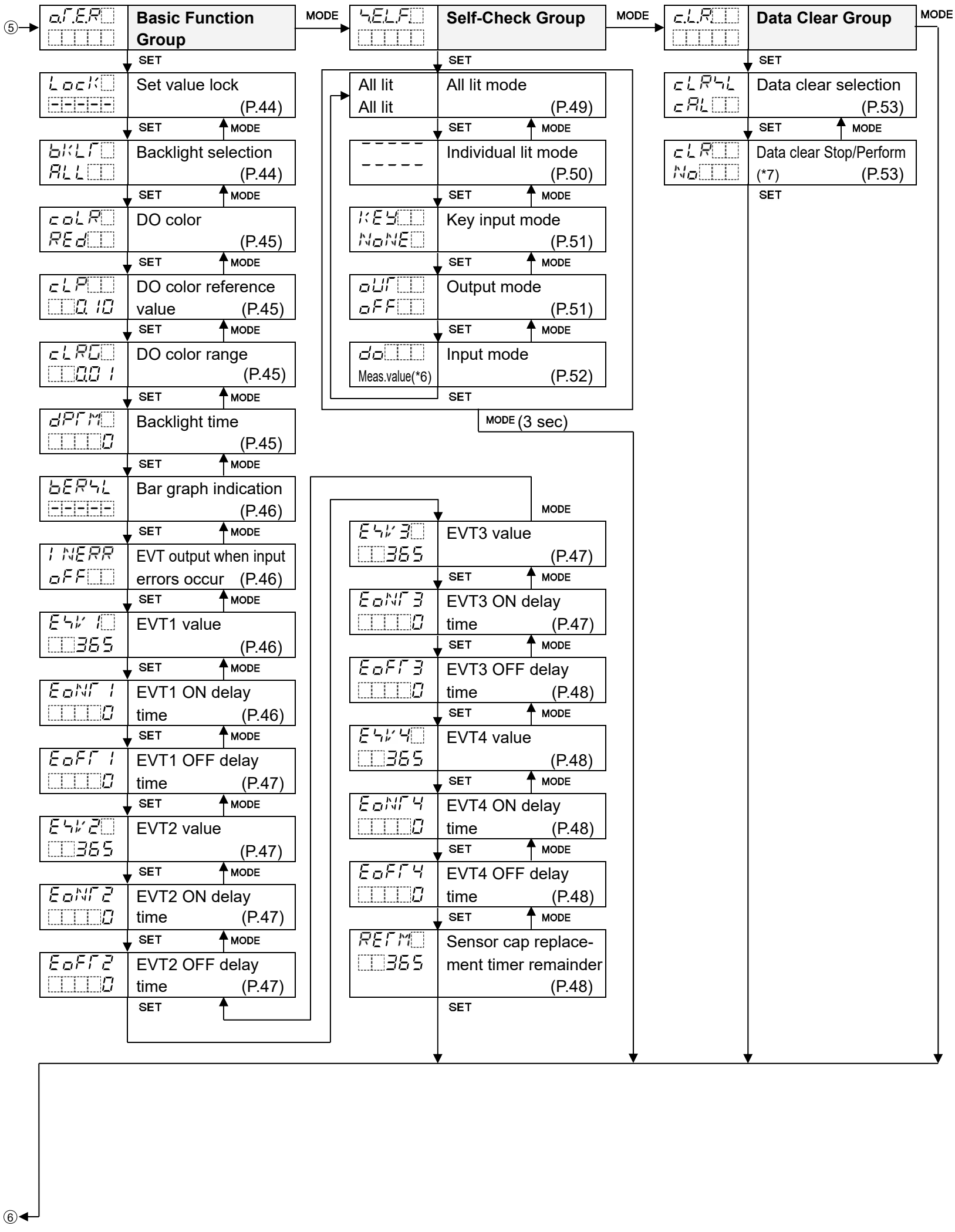
⑤
oT.ER
Basic Function Group
MODE
SELF
Self-Check Group
MODE
c.L.R
Data Clear Group
MODE
SET
LocK
Set value lock (P.44)
bKLT
ALL
Backlight selection (P.44)
coLR
REd
DO color (P.45)
cLP
0.10
DO color reference value (P.45)
cLRG
0.01
DO color range (P.45)
dPTM
0
Backlight time (P.45)
bERL
Bar graph indication (P.46)
INERR
oFF
EVT output when input errors occur (P.46)
EV 1
365
EVT1 value (P.46)
EoN 1
0
EVT1 ON delay time (P.46)
EoF 1
0
EVT1 OFF delay time (P.47)
EV 2
365
EVT2 value (P.47)
EoN2
0
EVT2 ON delay time (P.47)
EoF2
0
EVT2 OFF delay time (P.47)
All lit
All lit mode (P.49)
Individual lit mode (P.50)
KEY
NoNE
Key input mode (P.51)
oUT
oFF
Output mode (P.51)
do
Meas.value(*6)
Input mode (P.52)
MODE (3 sec)
EV 3
365
EVT3 value (P.47)
EoN3
0
EVT3 ON delay time (P.47)
EoF3
0
EVT3 OFF delay time (P.48)
EV 4
365
EVT4 value (P.48)
EoN4
0
EVT4 ON delay time (P.48)
EoF4
0
EVT4 OFF delay time (P.48)
REPM
365
Sensor cap replace-ment timer remainder (P.48)
cLRL
cAL
Data clear selection (P.53)
cLR
No
Data clear Stop/Perform (*7) (P.53)
⑥

13 Maintenance

13.1 Maintenance

■ Please perform the following maintenance procedure every month.

- Clean the measurement section with tap water.
- Check that the measurement section is not damaged or deteriorated.
- Check that DO Sensor cable is not damaged or deteriorated.
- Check that installation devices are not corroded.

13.2 Periodic Inspection

■ Please check the following items every 3 months.

- The DO Meter (AER-102-DO) is securely fixed in place.
- Check that the DO Meter (AER-102-DO) is not damaged.
- Check that screws in the terminal block are not rusty.

13.3 Replacement of Consumables (Maintenance Parts)

■ Purchase new sensor cap (DOS-CP), and replace one (1) year after installation (Recommended).

13.4 Calibration

■ The DO Meter (AER-102-DO) is designed to be used for a long period of time, however, calibrate it at least once a year to maintain measurement reliability. See Section “7. Calibration” (p.54).

13.5 Long-Term Storage

■ When the DO Meter (AER-102-DO) and DO Sensor are not used for a long period of time, store them as follows.

- Disconnect the power from the mains electricity.
- Pull the DO Sensor out of the water, and clean it.
- Store the DO Meter (AER-102-DO) and DO Sensor away from direct sunlight.

14. Reference Chart

Amount of saturated DO in water at each temperature
(1 atmospheric pressure, Salinity concentration 0 PSU)

Temper-ature (℃)	Amount of saturated DO (mg/L)	Temper-ature (℃)	Amount of saturated DO (mg/L)	Temper-ature (℃)	Amount of saturated DO (mg/L)	Temper-ature (℃)	Amount of saturated DO (mg/L)
1	14.22	11	11.03	21	8.92	31	7.43
2	13.83	12	10.78	22	8.74	32	7.31
3	13.46	13	10.54	23	8.58	33	7.18
4	13.11	14	10.31	24	8.42	34	7.07
5	12.77	15	10.08	25	8.26	35	6.95
6	12.45	16	9.87	26	8.11	36	6.84
7	12.14	17	9.67	27	7.97	37	6.73
8	11.84	18	9.47	28	7.83	38	6.62
9	11.56	19	9.28	29	7.69	39	6.52
10	11.29	20	9.09	30	7.56	40	6.41

JIS K 0102-2016

***** Inquiries *****

For any inquiries about this unit, please contact our agency or the vendor where you purchased the unit after checking the following.

[Example]

- Model ---------- AER-102-DO
- Serial number ---------- No. 194F05000

In addition to the above, please let us know the details of the malfunction, or discrepancy, and the operating conditions.

SHINKO TECHNOS CO., LTD.

OVERSEAS DIVISION

Head Office: 2-5-1, Senbahigashi, Minoo, Osaka, 562-0035, Japan

[URL] https://shinko-technos.co.jp/e/ Tel: +81-72-727-6100

[E-mail] overseas@shinko-technos.co.jp Fax: +81-72-727-7006

No.AER11DOE3 2022.02