PLUG-IN TYPE

PROGRAMMABLE SIGNAL CONDITIONER

SE2□ SERIES

INSTRUCTION MANUAL

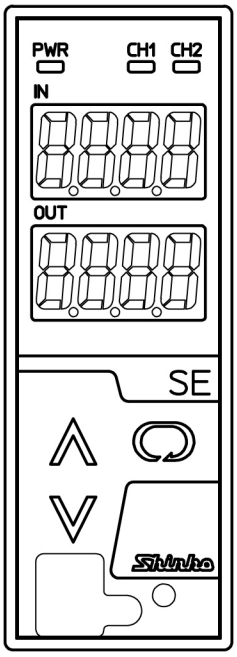

Shinko

Preface

Thank you for purchasing the SE2□ series Programmable Signal Conditioner.
This manual contains instructions for the mounting, functions, operations and notes when operating the SE2□ series. To ensure safe and correct use, thoroughly read and understand this manual before using this unit. To prevent accidents arising from the misuse of this instrument, please ensure the operator receives this manual.

Notes

- This instrument should be used in accordance with the specifications described in the manual. If it is not used according to the specifications, it may malfunction or cause a fire.
- Be sure to follow the warnings, cautions and notices. If they are not observed, serious injury or malfunction may occur.
- Specifications of the SE2□ series and the contents of this instruction manual are subject to change without notice.
- Care has been taken to assure that the contents of this instruction manual are correct, but if there are any doubts, mistakes or questions, please inform our sales department.
- This instrument is designed to be installed on a DIN rail within a control panel. If it is not, measures must be taken to ensure that the operator does not touch power terminals or other high voltage sections.
- Any unauthorized transfer or copying of this document, in part or in whole, is prohibited.
- Shinko Technos Co., Ltd. is not liable for any damages or secondary damages incurred as a result of using this product, including any indirect damages.

SAFETY PRECAUTIONS (Be sure to read these precautions before using our products.)
The safety precautions are classified into categories: “Warning” and “Caution”.
Depending on the circumstances, procedures indicated by ⚠ Caution may cause serious results, so be sure to follow the directions for usage.

⚠ Warning Procedures which may lead to dangerous conditions and cause death or serious injury, if not carried out properly.

⚠ Caution Procedures which may lead to dangerous conditions and cause superficial to medium injury or physical damage or may degrade or damage the product, if not carried out properly.

⚠ Warning

- To prevent an electric shock or fire, only Shinko or other qualified service personnel may handle the inner assembly.
- To prevent an electric shock, fire or damage to the instrument, parts replacement may only be undertaken by Shinko or other qualified service personnel.

⚠ Safety Precautions

- To ensure safe and correct use, thoroughly read and understand this manual before using this instrument.
- This instrument is intended to be used for industrial machinery, machine tools and measuring equipment. Verify correct usage after purpose-of-use consultation with our agency or main office. (Never use this instrument for medical purposes with which human lives are involved.)
- External protection devices such as protective equipment against excessive temperature rise, etc. must be installed, as malfunction of this product could result in serious damage to the system or injury to personnel. Also proper periodic maintenance is required.
- This instrument must be used under the conditions and environment described in this manual. Shinko Technos Co., Ltd. does not accept liability for any injury, loss of life or damage occurring due to the instrument being used under conditions not otherwise stated in this manual.

Caution with respect to Export Trade Control Ordinance
To avoid this instrument from being used as a component in, or as being utilized in the manufacture of weapons of mass destruction (i.e. military applications, military equipment, etc.), please investigate the end users and the final use of this instrument.
In the case of resale, ensure that this instrument is not illegally exported.

1. Installation Precautions

⚠ Caution

This instrument is intended to be used under the following environmental conditions (IEC61010-1): Overvoltage category Ⅱ, Pollution degree 2
Ensure the mounting location corresponds to the following conditions:

- A minimum of dust, and an absence of corrosive gases
- No flammable, explosive gases
- No mechanical vibrations or shocks
- No exposure to direct sunlight, an ambient temperature of -5 to 55 ℃ (23 to 131 ℉) that does not change rapidly, and no icing
- An ambient non-condensing humidity of 35 to 85 %RH
- No large capacity electromagnetic switches or cables through which large current is flowing
- No water, oil or chemicals or where the vapors of these substances can come into direct contact with the unit
- When installing this unit within a control panel, take note that the ambient temperature of this unit as well as the control panel must not exceed 55 ℃ (131 ℉). Otherwise the life of electronic components (especially electrolytic capacitors) may be shortened.

Note: Avoid setting this instrument directly on or near flammable material even though the case of this instrument is made of flame-resistant resin.

2. Wiring Precautions

⚠ Caution

- Do not leave wire remnants in the instrument, because they could cause a fire and/or a malfunction.
- When wiring terminals, use a solderless terminal with an insulation sleeve in which an M3 screw fits.
- Tighten the terminal screw using the specified torque.
  If excessive force is applied to the screw when tightening, the screw may be damaged.
- This instrument has no built-in power switch, circuit breaker or fuse.
  Be sure to install a built-in power switch, circuit breaker or fuse near the instrument.
  (Recommended fuse: Time-lag fuse, rated voltage 250 V AC, rated current 2 A)
- For wiring of AC power source, be sure to use exclusive terminals as described in this manual. If AC power source is connected to incorrect terminals, the unit will burn out.
- For a 24 V DC power source, do not confuse polarity.
- Do not apply a commercial power source to the sensor connected to the input terminal nor allow the power source to come into contact with the sensor.
- Use a thermocouple, compensating lead wire and 3-wire RTD according to the sensor input specifications of this unit.
- When using DC voltage and current input, do not confuse polarity when wiring.
- Keep the input/output wires and power line separate.

3. Operation and Maintenance Precautions

⚠ Caution

- Do not touch live terminals. This may cause electric shock or problems in operation.
- Turn the power supply to the instrument OFF when retightening the terminal and cleaning. Working on or touching the terminal with the power switched ON may result in severe injury or death due to electric shock.
- Use a soft, dry cloth when cleaning the instrument.
  (Alcohol based substances may tarnish or deface the unit.)
- As the display section is vulnerable, do not strike or scratch it with a hard object or put pressure on it.

Model Explanation

Model names included in this manual are indicated below.
An individual model name will be used for individual explanations.
For common explanations, the model name SE2□ will be used.

Indication	Model
SE2□	SE2U, SE2E, SE2R, SE2A, SE2V, SE2P, SE2D, SE2D-F

Characters Used in This Manual

Indication	-1	0	1	2	3	4	5	6	7	8	9	℃	℉
Number, ℃/℉	-1	0	1	2	3	4	5	6	7	8	9	℃	℉
Indication	A	b	c	d	E	F	G	H	I	J	k	L	m
Alphabet	A	B	C	D	E	F	G	H	I	J	K	L	M
Indication	n	o	P	q	r	s	T	U	v	W	X	Y	Z
Alphabet	N	O	P	Q	R	S	T	U	V	W	X	Y	Z

□ means that no character is indicated (unlit) on the display.

--- CONTENTS ---

1. Model

1.1 Model

SE2□ Series

S E	□□-	□-	□	□	
Signal Conditioner Type	2 U				2ch Universal/DC (*1) (*2)
	2 E				2ch Thermocouple/DC
	2 R				2ch RTD/DC
	2 A				2ch Direct current/DC (*2)
	2 V				2ch DC voltage/DC
	2 P				2ch Potentiometer/DC
	2 D				2ch Current Loop Supply/DC
	2 D			F	2ch Current Loop Supply/DC (Suitable for Field communicator usage)
Socket		1			Finger-safe, Screw fall prevention (Only Y terminals usable)
		2			Ring terminals usable
Power supply			0		100 to 240 V AC
			1		24 V AC/DC

(*1) SE2U accepts universal (all types of) inputs and outputs.
Types other than SE2U accept universal outputs only.
Input: Thermocouple, RTD, Direct current, DC voltage
Output: Direct current, DC voltage

(*2) For Direct current input, a shunt resistor (sold separately) is required.

(e.g.) SE2U-1-0
Type: 2ch Universal transmitter
Socket: Finger-safe, Screw fall prevention (Only Y terminals usable)
Power supply: 100 to 240 V AC
Factory default: Input: 1 to 5 V DC (for CH1 and CH2)
Output: 4 to 20 mA DC (for CH1 and CH2)

1.2 How to Read the Model Label

The model label is attached to the left side of the case.

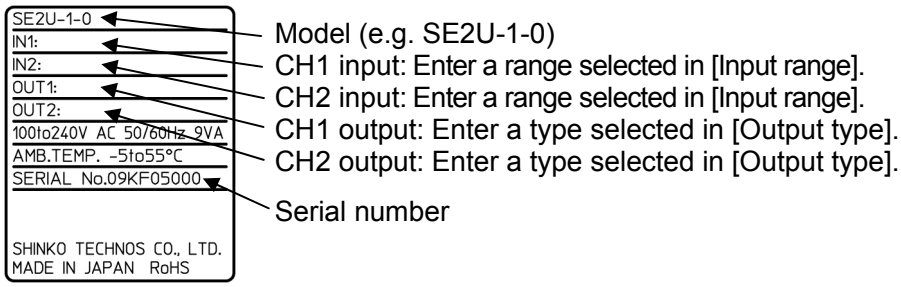

(Fig. 1.2-1)

2. Name and Functions of Sections

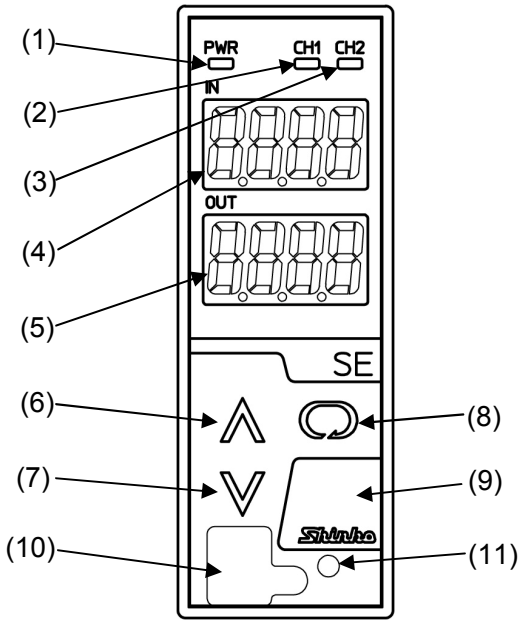

(Fig. 2-1)

(1) Power indicator (Green): Lights when the power to the instrument is turned ON.

(2) CH1 indicator (Yellow): Lights when CH1 input value and output value are indicated.

(3) CH2 indicator (Yellow): Lights when CH2 input value and output value are indicated.

(4) Input display (Red): Indicates the input value in RUN mode.
Indicates setting item characters in Setup mode.
Indicates adjustment item characters in Adjustment mode.

(5) Output display (Red): Indicates the output value (%) in RUN mode.
Indicates the set value in Setup mode.
Indicates the adjustment value in Adjustment mode.

(6) UP Key (∧): Increases the numeric value, or switches the selection items.

(7) DOWN Key (∨): Decreases the numeric value, or switches the selection items.

(8) MODE Key (◯): Selects or switches groups, and registers the set value.

(9) SUB-MODE Key
Turns the displays ON again while they are in OFF status. (The UP, DOWN or MODE Key also turns the displays ON again while they are in OFF status.)

(10) Console connector
By connecting to the USB communication cable (CMB-001, sold separately), the following operations can be conducted from an external computer using the SWS-SE001M Console software: Reading/setting of various set values, Reading of input values and action status

(11) Light sensor
Automatically measures and controls brightness of the Input and Output displays.

⚠ Notice

When setting the specifications and functions of this instrument, connect terminals 13 and 14 for a power source first, then set them referring to “5. Key Operation Flowchart” and “6. Setup” before performing “3. Mounting” and “4. Wiring”.

3. Mounting

3.1 External Dimensions (Scale: mm)

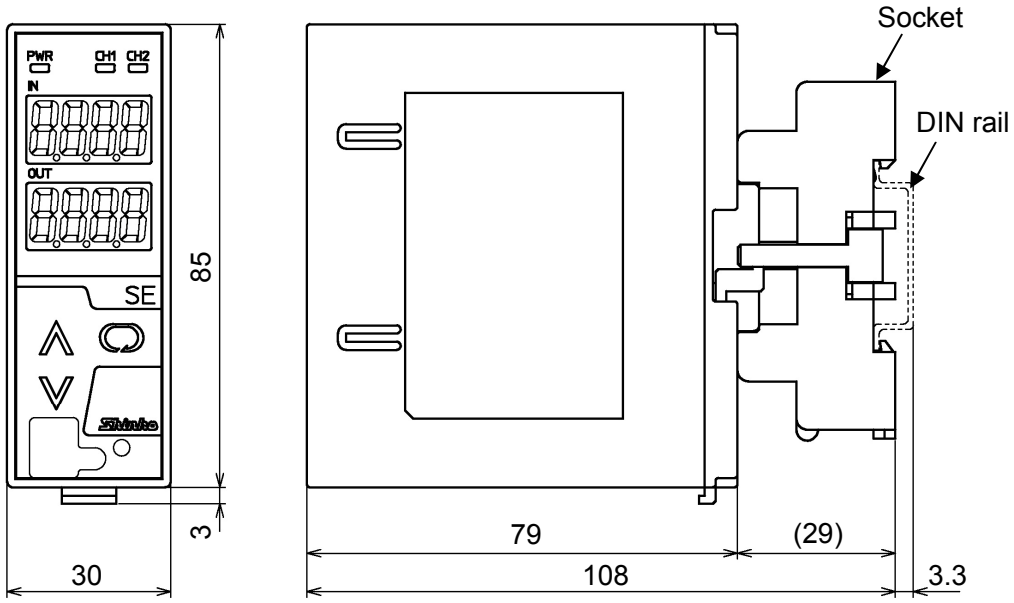

(Fig. 3.1-1)

3.2 Mounting to a DIN Rail

(1) Hook the upper part of the socket on the DIN rail, and mount it.
(A clicking sound is heard.)

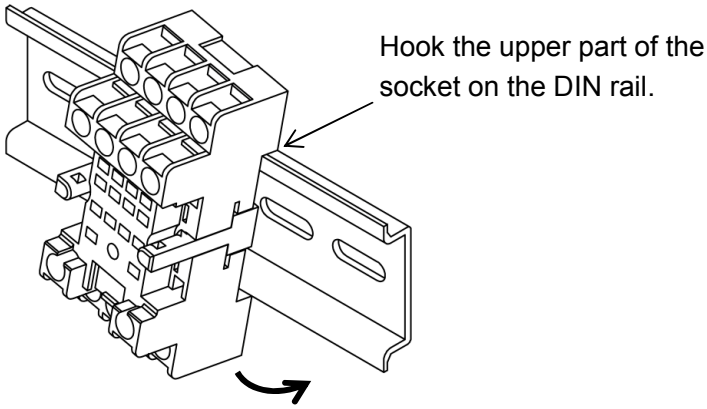

(Fig. 3.2-1)

⚠ Caution

Wire the instrument before inserting the unit into the socket.
For wiring, refer to Section “4. Wiring”.

(2) Confirm that the Lock Release is lowered.

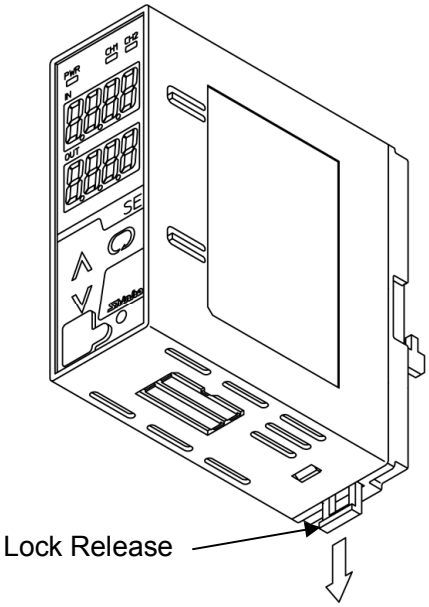

(Fig. 3.2-2)

(3) Insert the SE2□ series into the socket.

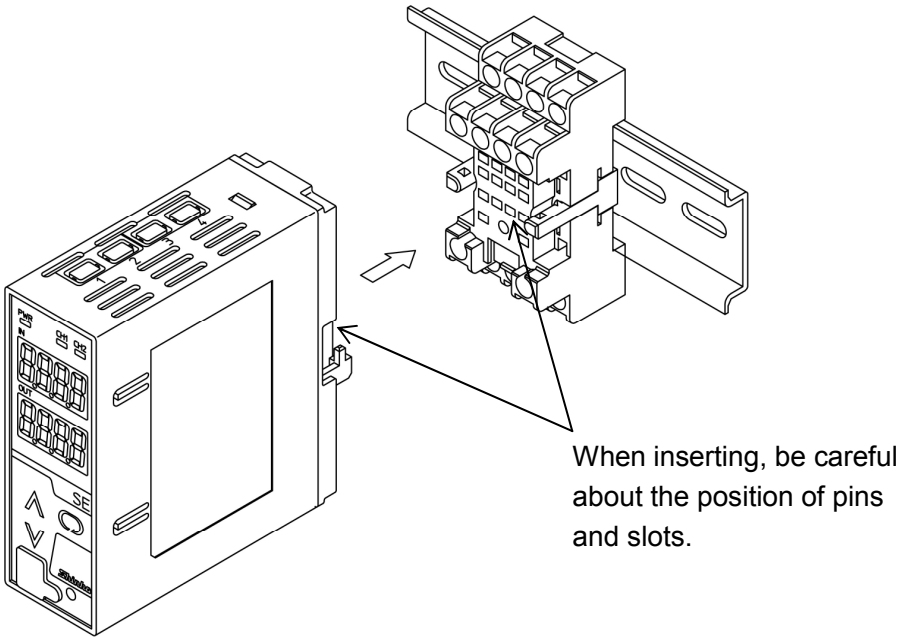

(Fig. 3.2-3)

(4) Fix the SE2□ series and the socket by pushing the Lock Release up.

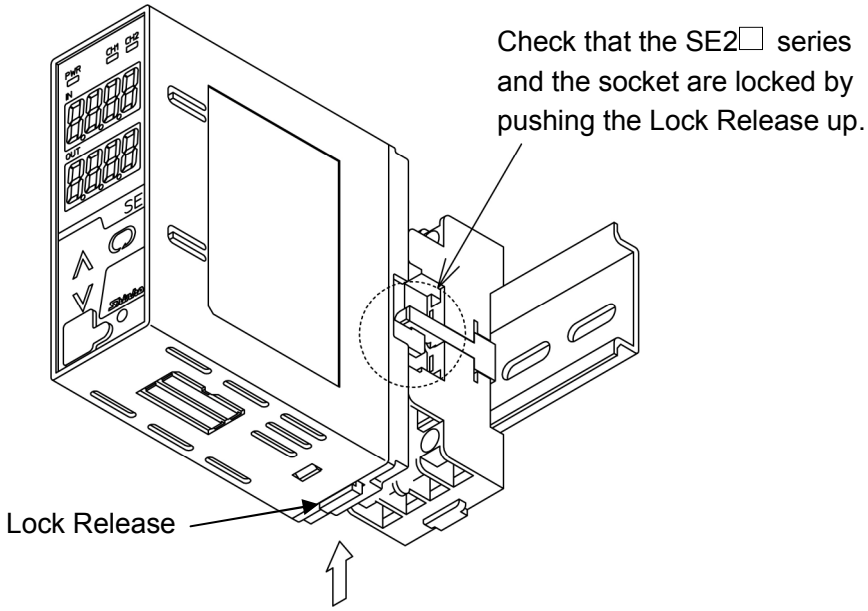

(Fig. 3.2-4)

3.3. Removal from a DIN Rail

(1) Turn the power supply to the unit OFF.

(2) Pull the Lock Release down, and release the SE2□ series from the socket.

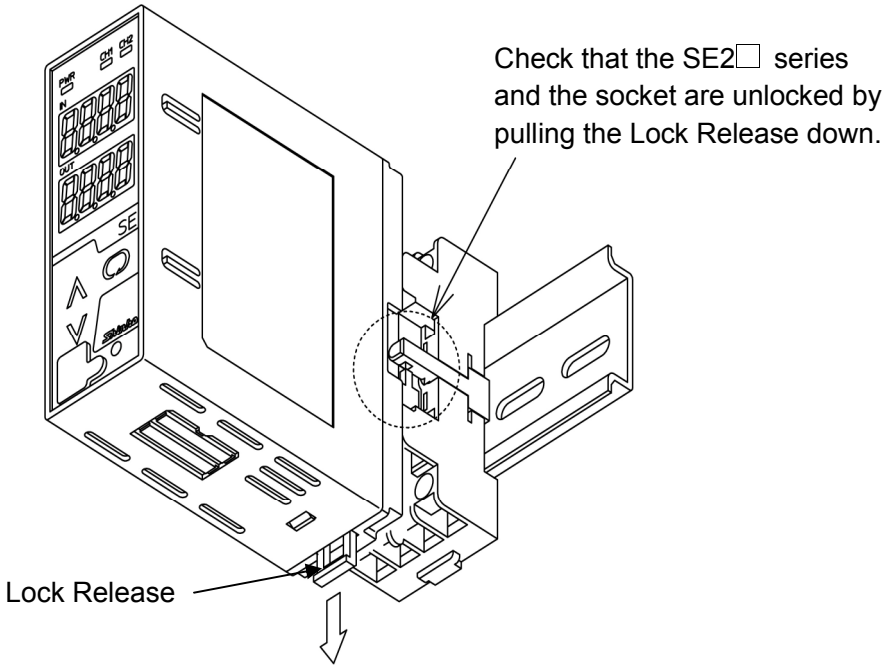

(Fig. 3.3-1)

(3) Separate the SE2□ series from the socket.

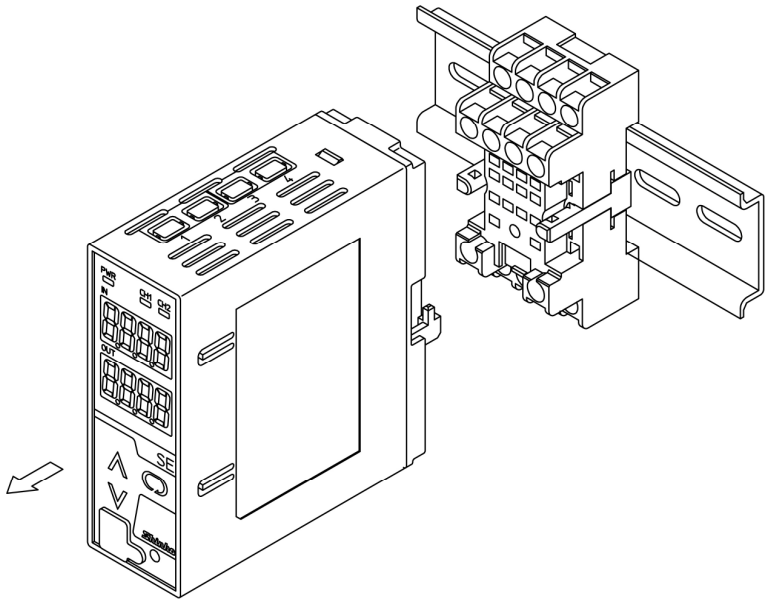

(Fig. 3.3-2)

(4) Remove the socket from the DIN rail by pulling the Socket Lock Release (at the bottom of the socket) down.

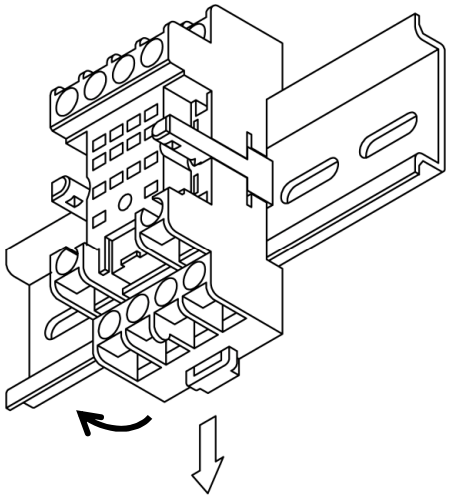

(Fig. 3.3-3)

4. Wiring

⚠ Warning

Turn the power supply to the instrument off before wiring.
Working on or touching the terminal with the power switched on may result in severe injury or death due to electric shock.

4.1 Lead Wire Solderless Terminal

Use a solderless terminal with an insulation sleeve in which an M3 screw fits as follows. For the sockets with finger-safe & screw fall prevention functions, the ring terminals are unusable.

The torque should be 0.63 N•m.

Solderless Terminal	Manufacturer	Model
Y-type	Nichifu Terminal Industries CO., LTD.	TMEV1.25Y-3S
Ring-type	Nichifu Terminal Industries CO., LTD.	TMEV 1.25-3
	Japan Solderless Terminal MFG CO., LTD.	V1.25-3

(Scale: mm)

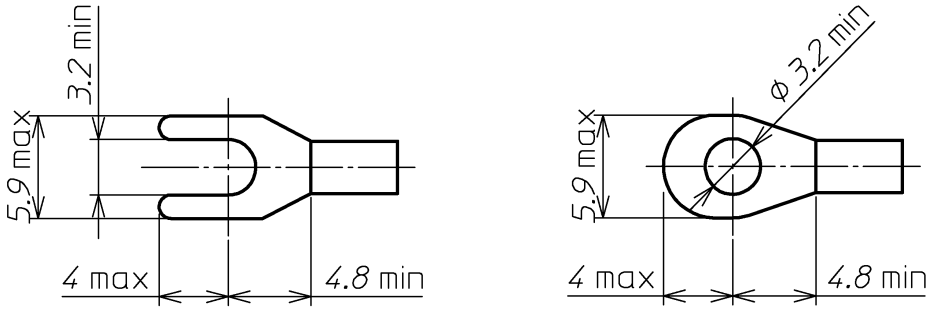

(Fig. 4.1-1)

4.2 Terminal Arrangement, Circuit Configuration

SE2U, SE2E, SE2R, SE2A, SE2V

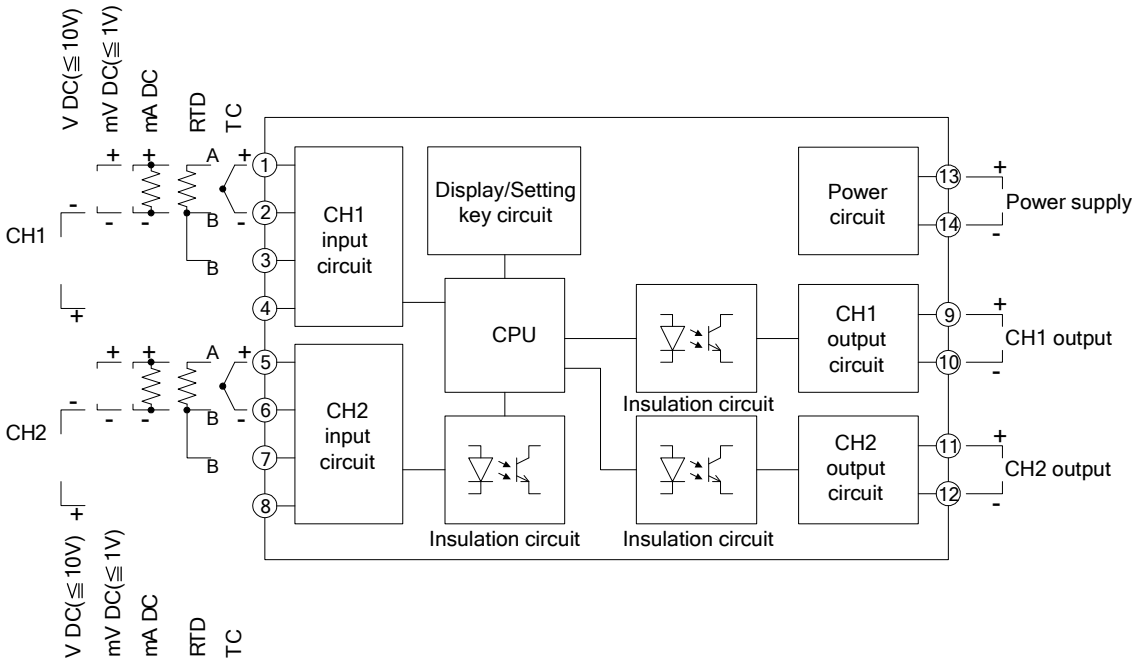

DC voltage input:

mV DC(≦1V) : 0 to 10 mV DC, -10 to 10 mV DC, 0 to 50 mV DC, 0 to 60 mV DC, 0 to 100 mV DC, 0 to 1 V DC

V DC(≦10V) : 0 to 5 V DC, 1 to 5 V DC, 0 to 10 V DC

(Fig. 4.2-1)

SE2P

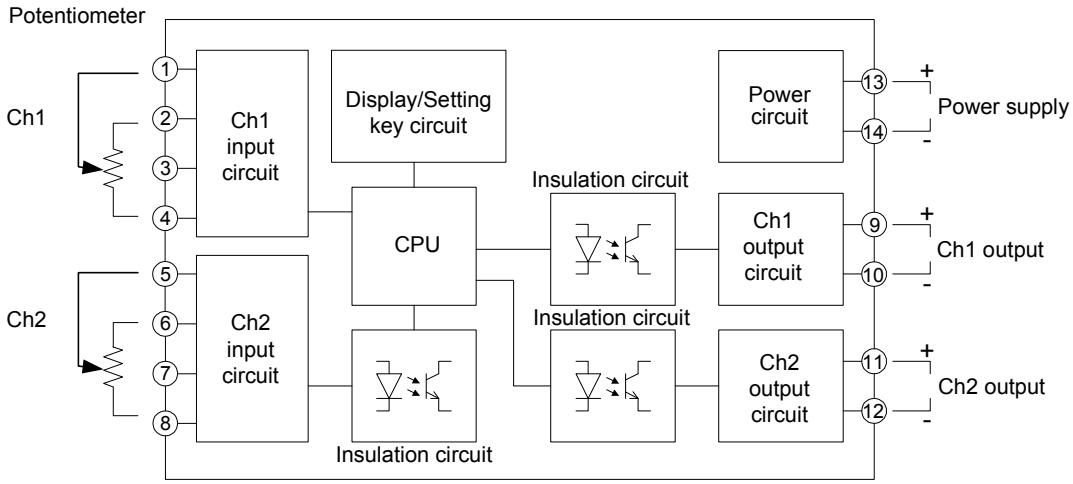

(Fig. 4.2-2)

SE2D

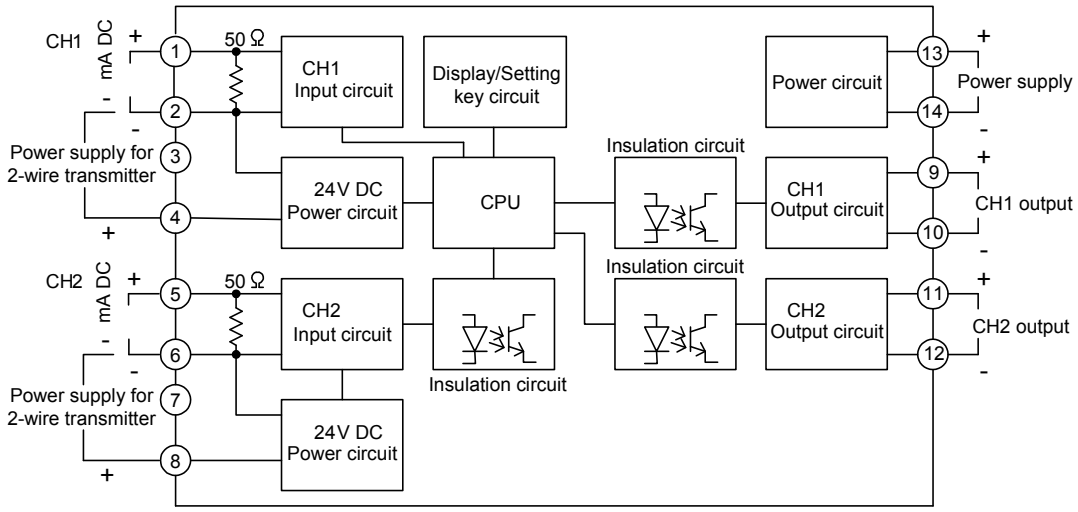

(Fig. 4.2-3)

SE2D-F

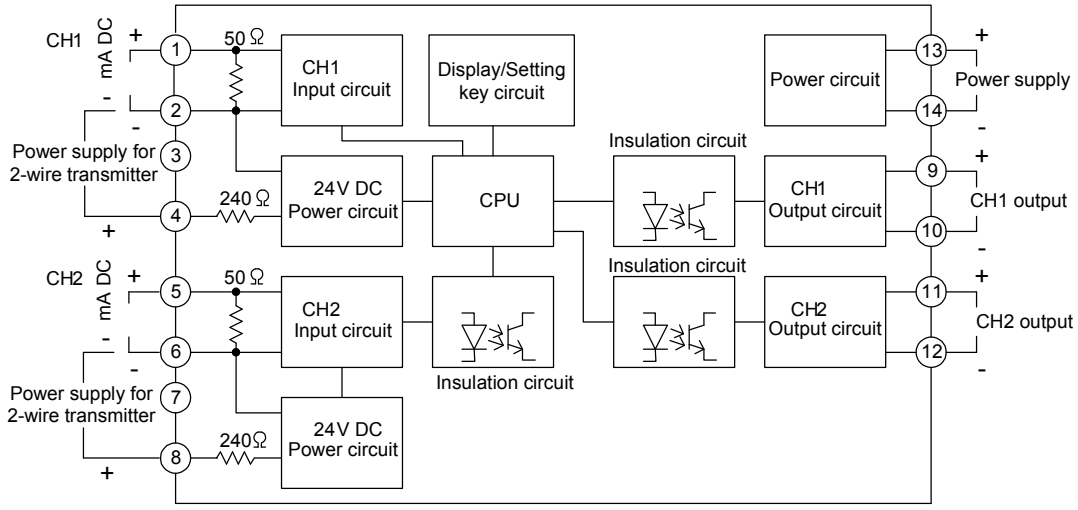

(Fig. 4.2-4)

4.3 Wiring of Terminals

⚠ Warning

- For 100 to 240 V AC, if AC power source is connected to incorrect terminals, this instrument will burn out.
- For a 24 V DC power source, do not confuse polarity when wiring.

4.3.1 Power Source Wiring

Use terminals 13 (+) and 14 (-) for the power supply to the instrument.

4.3.2 Output Wiring

Use terminals 9 (+) and 10 (-) for CH1 output wiring.

Use terminals 11 (+) and 12 (-) for CH2 output wiring.

4.3.3 Input Wiring

SE2U (thermocouple, RTD, DC voltage input), SE2E, SE2R, SE2V, SE2P:

Terminals for wiring differ depending on the input specifications.
See (Fig. 4.2-1, 4.2-2, p.13).

SE2U (Direct current input), SE2A:

For CH1, use terminals 1 (+), 2 (-) for input wiring and shunt resistor connection.
For CH2, use terminals 5 (+), 6 (-) for input wiring and shunt resistor connection.
See (Table 4.3.3-1). (Shunt resistor: Sold separately)

(Table 4.3.3-1)

Input	Shunt Resistor			
	Model (Y-type terminal)	Model (Ring-type terminal)	Specification	
4 to 20 mA DC 0 to 20 mA DC 0 to 16 mA DC	RES-S06-050	RES-S01-050	50 Ω	±0.1%
2 to 10 mA DC 0 to 10 mA DC	RES-S06-100	RES-S01-100	100 Ω	±0.1%
1 to 5 mA DC	RES-S06-200	RES-S01-200	200 Ω	±0.1%
0 to 1 mA DC	RES-S06-01K	RES-S01-01K	1 kΩ	±0.1%

SE2D, SE2D-F: When using CH1 as a Current Loop Supply or as an Isolator, be sure to wire the unit as follows. For CH2 wiring, see (Fig. 4.2-3, 4.2-4, p.14).

SE2D

As a Current Loop Supply

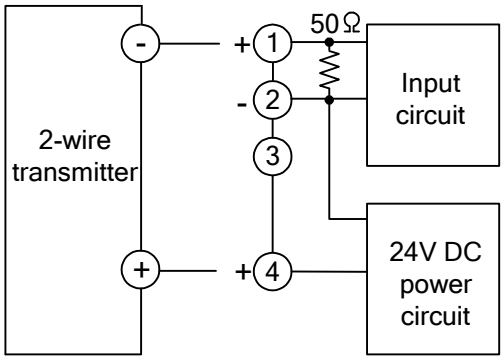

(Fig. 4.3.3-1)

As an Isolator

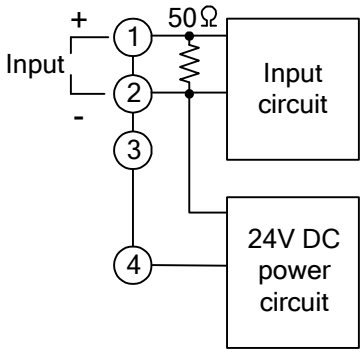

(Fig. 4.3.3-2)

SE2D-F

As a Current Loop Supply

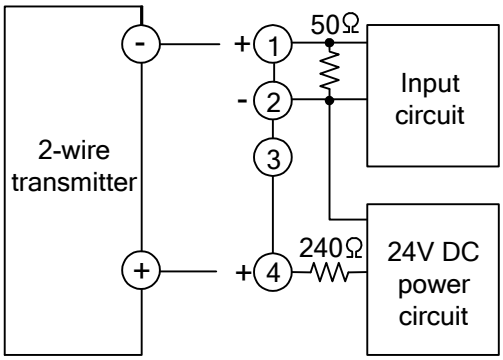

(Fig. 4.3.3-3)

As an Isolator

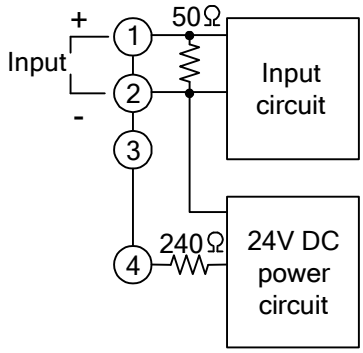

(Fig. 4.3.3-4)

5. Key Operation Flowchart

POWER ON

The Input display indicates CH1 input characters and unit, and the Output display indicates CH2 input characters and unit for 3 sec after power is turned ON. See (Table 5-1).

RUN Mode

CH1 Output Adjustment Group

- **Output zero adjust** (0.00) -5.00 to 5.00 %
- **Output span adjust** (0.00) -5.00 to 5.00 %
- **Potentiometer input zero adjust** (*1) (-1999)
- **Potentiometer input span adjust** (*1) (9999)

CH2 Output Adjustment Group

- **Output zero adjust** (0.00) -5.00 to 5.00 %
- **Output span adjust** (0.00) -5.00 to 5.00 %
- **Potentiometer input zero adjust** (*1) (-1999)
- **Potentiometer input span adjust** (*1) (9999)

CH1 Function Group

- **Input type** (*2)
  - Tc: Thermocouple
  - rtd: RTD
  - dcA: Direct current
  - dcV: DC voltage
- **Input range** (*3) See (Table 5-1).
- **Decimal point place** (*4)
  - 0: No decimal point
  - 0.0: 1 digit after point
  - 0.00: 2 digits after point
  - 0.000: 3 digits after point
- **Output 0 % value** (-1999) Input range low limit to Output 100 % value; DC input: -1999 to Output 100 % value
- **Output 100 % value** (9999) Output 0 % value to Input range high limit; DC input: Output 0 % value to 9999
- **Filter time constant** (0.0) 0.0 to 10.0 sec
- **Sensor correction** (0) -100.0 to 100.0 ℃ (℉); -1000 to 1000 (DC input)
- **Output type** (420A) See (Table 5-2).
- **Output Normal/Reverse** (nonL)
  - nonL: Normal
  - rEV: Reverse
- **Burnout** (*5) (UP)
  - UP: Upscale
  - down: Downscale

(Table 5-1)

Item	Input Type & Range	Item	Input Type & Range
t.C	K -200 to 1370 ℃	t.F	K -328 to 2498 ℉
t.2C	K -200 to 200 ℃ (*)	t.2F	K -328 to 392 ℉ (*)
t.4C	K 0 to 400 ℃ (*)	t.4F	K 32 to 752 ℉ (*)
J.C	J -200 to 1000 ℃	J.F	J -328 to 1832 ℉
J.2C	J -200 to 200 ℃ (*)	J.2F	J -328 to 392 ℉ (*)
J.4C	J 0 to 400 ℃ (*)	J.4F	J 32 to 752 ℉ (*)
r.C	R -50 to 1760 ℃	r.F	R -58 to 3200 ℉
S.C	S -50 to 1760 ℃	S.F	S -58 to 3200 ℉
b.C	B 0 to 1820 ℃	b.F	B 32 to 3308 ℉
E.C	E -200 to 800 ℃	E.F	E -328 to 1472 ℉
T.C	T -200 to 400 ℃ (*)	T.F	T -328 to 752 ℉ (*)
n.C	N -200 to 1300 ℃	n.F	N -328 to 2372 ℉
PL2C	PL-Ⅱ 0 to 1390 ℃	PL2F	PL-Ⅱ 32 to 2534 ℉
c.C	W5Re/W26Re 0 to 2315 ℃	c.F	W5Re/W26Re 32 to 4199 ℉
d.C	W3Re/W25Re 0 to 2315 ℃	d.F	W3Re/W25Re 32 to 4199 ℉
Pt.C	Pt100 -200 to 850 ℃	Pt.F	Pt100 -328 to 1562 ℉
Pt1C	Pt100 -100 to 100 ℃ (*)	Pt1F	Pt100 -148 to 212 ℉ (*)
JPtC	JPt100 -200 to 500 ℃	JPtF	JPt100 -328 to 932 ℉
420A	4 to 20 mA DC -1999 to 9999	01.5V	0 to 10 mV DC -1999 to 9999
020A	0 to 20 mA DC -1999 to 9999	11.5V	-10 to 10 mV DC -1999 to 9999
016A	0 to 16 mA DC -1999 to 9999	05.5V	0 to 50 mV DC -1999 to 9999
210A	2 to 10 mA DC -1999 to 9999	06.5V	0 to 60 mV DC -1999 to 9999
010A	0 to 10 mA DC -1999 to 9999	00.1V	0 to 100 mV DC -1999 to 9999
1.5A	1 to 5 mA DC -1999 to 9999	0.1V	0 to 1 V DC -1999 to 9999
0.1A	0 to 1 mA DC -1999 to 9999	0.5V	0 to 5 V DC -1999 to 9999
		1.5V	1 to 5 V DC -1999 to 9999
		010V	0 to 10 V DC -1999 to 9999

(*) 'No decimal point' or '1 digit after decimal point' can be selected in [Decimal point place].

(Table 5-2)

Item	Output Type	Item	Output Type
420A	4 to 20 mA DC	0.1V	0 to 1 V DC
020A	0 to 20 mA DC	0.5V	0 to 5 V DC
012A	0 to 12 mA DC	1.5V	1 to 5 V DC
010A	0 to 10 mA DC	010V	0 to 10 V DC
1.5A	1 to 5 mA DC		

Fnc2 — CH2 Function Group

sEns / dcV — Input type (*2)
- rtc : Thermocouple
- rtd : RTD
- dcA : Direct current
- dcV : DC voltage

dcV / 1.5V — Input range (*3)
See (Table 5-1).

dP / 0 — Decimal point place (*4)
- 0 : No decimal point
- 0.0 : 1 digit after point
- 0.00 : 2 digits after point
- 0.000 : 3 digits after point

sPLL / -999 — Output 0 % value
Input range low limit to Output 100 % value
DC input: -1999 to Output 100 % value

sPLH / 9999 — Output 100 % value
Output 0 % value to Input range high limit
DC input: Output 0 % value to 9999

FILT / 0.0 — Filter time constant
0.0 to 10.0 sec

ho / 0 — Sensor correction
-100.0 to 100.0 ℃ (℉)
-1000 to 1000 (DC input)

oUtP / 420A — Output type
See (Table 5-2).

oUtS / nonL — Output Normal/Reverse
- nonL : Normal
- rEVS : Reverse

bUrn / UP — Burnout (*5)
- UP : Upscale
- down : Downscale

SFnc — Common to CH1/CH2 Special Function Group

Lock / ---- — Set value lock
- ---- : Unlock
- Lock : Lock

rtm / 250 — Input sampling period (Response time)
- 25 : 25 ms [65 ms(typ.)(0 → 90 %)]
- 125 : 125 ms [225 ms(typ.)(0 → 90 %)]
- 250 : 250 ms [425 ms(typ.)(0 → 90 %)]

LIGt / ---- — Auto-light function
- ---- : Disabled
- LIGt : Enabled

dISP / CH1 — Display selection

	[Input Display]	[Output Display]
CH1	CH1 input value	CH1 output display
CH2	CH2 input value	CH2 output display
In	CH1 input value	CH2 input value
oUt	CH1 output value	CH2 output value
none	No indication	No indication

tIME / 00.00 — Indication time
00.00 (Remains lit)
00.01 to 60.00 (Minutes.Seconds)

[About Setting Items]

oZr1 / 0.00 — Output zero adjust
-5.00 to 5.00 %

- Upper left (Input display): Shows setting or adjustment characters.
  Lower left (Output display): Shows factory default.
- Upper right: Shows setting or adjustment items.
  Lower right: Shows setting ranges.
- Depending on the model, some items do not appear.
  (*1) Available for the SE2P only.
  (*2) Available for the SE2U only.
  (*3) Not available for the SE2P, SE2D, SE2D-F.
  (*4) Available if DC voltage or current is selected in [Input type] or if (*) range for thermocouple or RTD (Table 5-1) is selected.
  (*5) Available for the thermocouple or RTD input.

[Key Operation]
- ◎, ∨: This means that if the ◎ or ∨ key is pressed, the unit proceeds to the next setting mode.
- The ∧ or ∨ key sets the setting (or adjustment) items, and the ◎ registers the value.
- By pressing the ◎ key for 3 sec, it is possible to return to RUN mode from any setting (or adjustment) mode.

6. Setup

Setup should occur before using this unit, in order to set the Input type (SE2U), Input range, Output 0 % value, Output 100 % value, Output type, etc. according to the users' conditions.

Setup is conducted in the CH1 function group, CH2 function group and Special function group.

If the users' specifications are the same as the factory default of the instrument, or if setup has already been completed, it is not necessary to set up the instrument. Proceed to Section "7. Adjustment".

Refer to factory defaults on (Table 6-1) and (Table 6-2).

(Table 6-1) CH1/CH2 Function Group

CH1 and CH2 have respective setting items.

Setting Item	Factory Default
Input type	DC voltage (Available for the SE2U only)
Input range (*)	1 to 5 V DC -1999 to 9999 (SE2U, SE2V)
	4 to 20 mA DC -1999 to 9999 (SE2A)
	K -200 to 1370 ℃ (SE2E)
	Pt100 -200 to 850 ℃ (SE2R)
Decimal point place	No decimal point
Output 0 % value	-1999 (SE2U, SE2A, SE2V, SE2P, SE2D, SE2D-F)
	-200 ℃ (SE2E, SE2R)
Output 100 % value	9999 (SE2U, SE2A, SE2V, SE2P, SE2D, SE2D-F)
	1370 ℃ (SE2E)
	850 ℃ (SE2R)
Filter time constant	0.0 sec
Sensor correction	0 (SE2U, SE2A, SE2V, SE2P, SE2D, SE2D-F)
	0.0 ℃ (SE2E, SE2R)
Output type	4 to 20 mA DC
Output Normal/Reverse	Normal
Burnout	Upscale (SE2E, SE2R)

(*) Not available for the SE2P, SE2D, SE2D-F.

(Table 6-2) Special Function Group

These items are common to CH1 and CH2.

Setting Item	Factory Default
Set value lock	Unlock
Input sampling period (Response time)	250 ms [425 ms (typ.) (0 → 90 %)]
Auto-light function	Disabled
Display selection	CH1 Input value/Output value
Indication time	00.00 (Remains lit)

6.1 Indication after Power-on

After power-on, the unit moves to warm-up status for approx. 3 sec as shown below (Fig. 6.1-1).

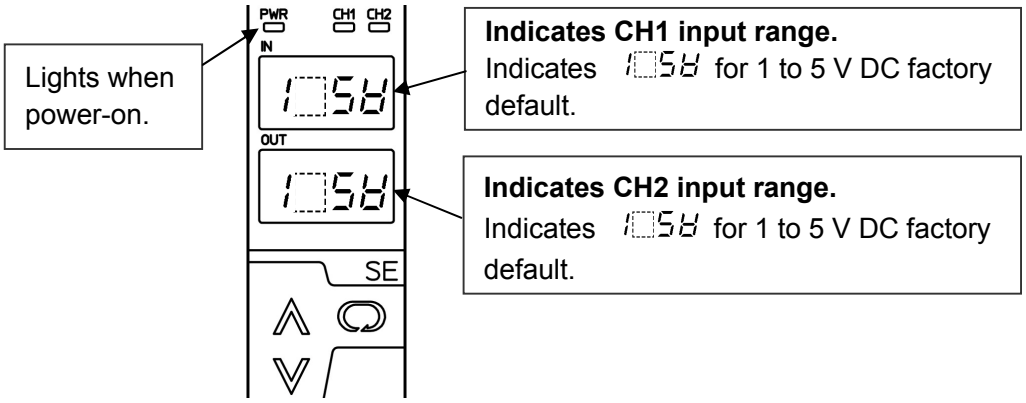

(Fig. 6.1-1)

After that, the unit switches to RUN mode as shown below (Fig. 6.1-2).

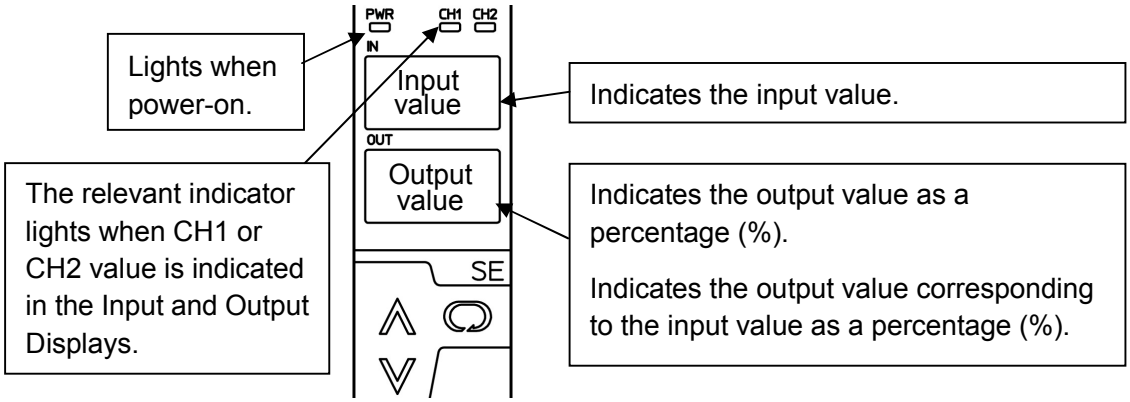

(Fig. 6.1-2)

6.2 Basic Operation of Setup

Setup is conducted in each function group.
In the CH1 and CH2 function groups, CH1 and CH2 should be set respectively.
In Special function group, setting items are common to CH1 and CH2.

(e.g.) To enter the CH1 function group for the SE2U:

(1) In RUN mode, press the key 3 times. (Fig. 6.2-1, p.20)

(2) Press the key while CH1 function group characters are indicated. (Fig. 6.2-2, p.20)

(3) The unit moves to the [Input type] item in the CH1 function group. To set (or select) each item, use the or key, and register the value with the key. (Fig. 6.2-3, p.20)
If the key is pressed at the last setting item, the unit reverts to RUN mode.

(1) RUN Mode

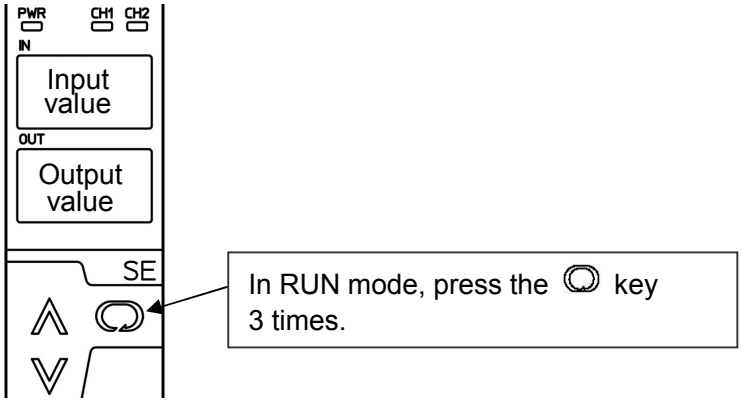

(Fig. 6.2-1)

(2) CH1 Function Group

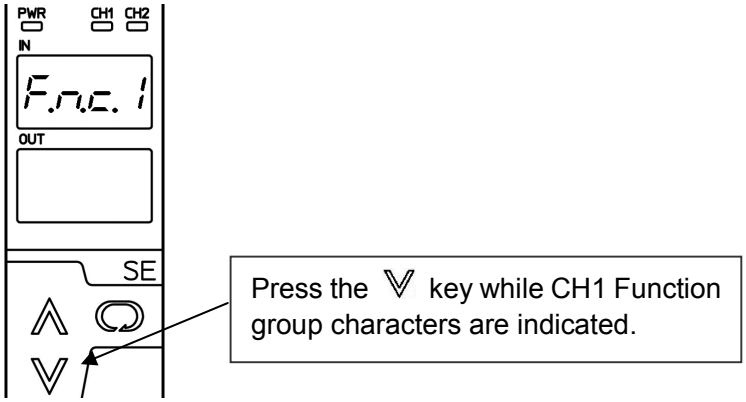

(Fig. 6.2-2)

(3) Input Type Selection

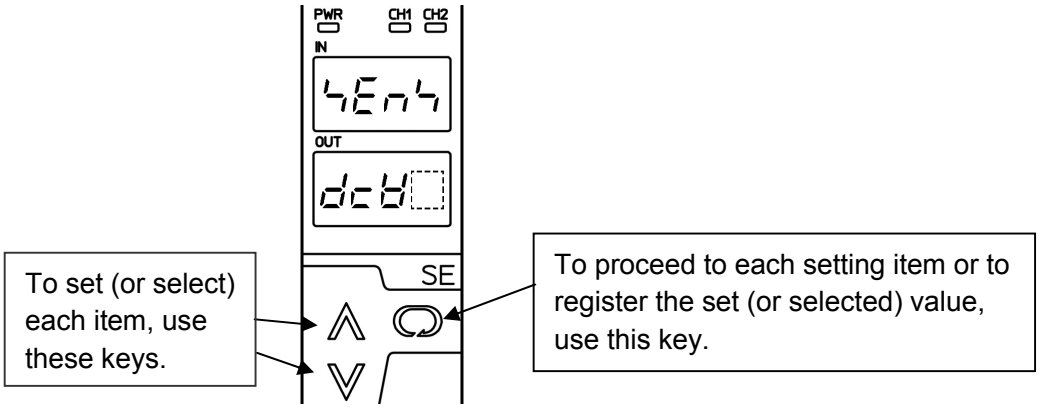

(Fig. 6.2-3)

6.3 Setup

6.3.1 CH1 Function Group

To enter the CH1 Function group, follow the procedures below.

(1) F.n.c. 1 In RUN mode, press the key 3 times.
(2) SEnS Press the key. For the SE2U, Input type item appears.
For the SE2A, SE2V, SE2E, SE2R, each Input range item appears.
For the SE2P, SE2D, SE2D-F, Decimal point place item appears.

Set up the unit referring to the explanation of each item.

Display	Name, Function, Setting Range	Factory Default
IN SEnS OUT dcV□	**Input type** Selects an input type. Available for the SE2U only. Tc□□: Thermocouple input rTd□: RTD input dcA□: Direct current input dcV□: DC voltage input	DC voltage input
IN Tc□□ OUT t□□C	**Thermocouple input range** Selects thermocouple input range. Available for thermocouple input. t□□C : K -200 to 1370 ℃ t□2C : K -200 to 200 ℃ (*1) t□4C : K 0 to 400 ℃ (*1) J□□C : J -200 to 1000 ℃ J□2C : J -200 to 200 ℃ (*1) J□4C : J 0 to 400 ℃ (*1) r□□C : R -50 to 1760 ℃ S□□C : S -50 to 1760 ℃ b□□C : B 0 to 1820 ℃ E□□C : E -200 to 800 ℃ T□□C : T -200 to 400 ℃ (*1) n□□C : N -200 to 1300 ℃ PL2C : PL-Ⅱ 0 to 1390 ℃ c□□C : W5Re/W26Re 0 to 2315 ℃ d□□C : W3Re/W25Re 0 to 2315 ℃ t□□F : K -328 to 2498 ℉ t□2F : K -328 to 392 ℉ (*1) t□4F : K 32 to 752 ℉ (*1) J□□F : J -328 to 1832 ℉ J□2F : J -328 to 392 ℉ (*1) J□4F : J 32 to 752 ℉ (*1) r□□F : R -58 to 3200 ℉ S□□F : S -58 to 3200 ℉ b□□F : B 32 to 3308 ℉ E□□F : E -328 to 1472 ℉ T□□F : T -328 to 752 ℉ (*1) n□□F : N -328 to 2372 ℉ PL2F : PL-Ⅱ 32 to 2534 ℉ c□□F : W5Re/W26Re 32 to 4199 ℉ d□□F : W3Re/W25Re 32 to 4199 ℉	K -200 to 1370 ℃

Display	Name, Function, Setting Range	Factory Default
IN rtd□ OUT Pt□C	**RTD input range** Selects RTD input range. Available for RTD input. Pt□C : Pt100 -200 to 850 ℃ Pt 1C : Pt100 -100 to 100 ℃ (*1) JPtC : JPt100 -200 to 500 ℃ Pt□F : Pt100 -328 to 1562 ℉ Pt 1F : Pt100 -148 to 212 ℉ (*1) JPtF : JPt100 -328 to 932 ℉	Pt100 -200 to 850 ℃
IN dcA□ OUT 420A	**Direct current input range** Selects Direct current input range. Available for Direct current input. 420A : 4 to 20 mA DC -1999 to 9999 020A : 0 to 20 mA DC -1999 to 9999 0 16A : 0 to 16 mA DC -1999 to 9999 2 10A : 2 to 10 mA DC -1999 to 9999 0 10A : 0 to 10 mA DC -1999 to 9999 1□5A : 1 to 5 mA DC -1999 to 9999 0□ 1A : 0 to 1 mA DC -1999 to 9999	4 to 20 mA DC -1999 to 9999
IN dcV□ OUT 1□5V	**DC voltage input range** Selects DC voltage input range. Available for DC voltage input. 0 1mV : 0 to 10 mV DC -1999 to 9999 -1 1mV : -10 to 10 mV DC -1999 to 9999 05mV : 0 to 50 mV DC -1999 to 9999 06mV : 0 to 60 mV DC -1999 to 9999 00.1V : 0 to 100 mV DC -1999 to 9999 0□ 1V : 0 to 1 V DC -1999 to 9999 0□5V : 0 to 5 V DC -1999 to 9999 1□5V : 1 to 5 V DC -1999 to 9999 0 10V : 0 to 10 V DC -1999 to 9999	1 to 5 V DC -1999 to 9999
IN dP□□ OUT □□□0	**Decimal point place** Selects the decimal point place. Available for DC voltage, current input. When (*1) range (pp.21, 22) is selected in [Thermocouple input range] & [RTD input range], 'No decimal point' or '1 digit after decimal point' can be selected. □□□0: No decimal point □□0.0: 1 digit after decimal point □0.00: 2 digits after decimal point 0.000: 3 digits after decimal point	No decimal point
IN SrLL OUT -999	**Output 0 % value** • Thermocouple, RTD input: Sets the temperature at 0 % output. Setting range: Input range low limit to Output 100 % value (*2) • DC voltage, current input or SE2P, SE2D, SE2D-F: Sets the value (indicated on the Input display) at 0 % output. Setting range: -1999 to Output 100 % value	-1999 (SE2U, SE2A, SE2V, SE2P, SE2D, SE2D-F) -200 ℃ (SE2E, SE2R)

(*2) The minimum input span is 50 ℃ (100 ℉).

Display	Name, Function, Setting Range	Factory Default
IN 4FLH OUT 9999	**Output 100 % value** • Thermocouple, RTD input: Sets the temperature at 100 % output. Setting range: Output 0 % value to Input range high limit value (*2) • DC voltage, current input or SE2P, SE2D, SE2D-F: Sets the value (indicated on the Input display) at 100 % output. Setting range: Output 0 % value to 9999	9999 (SE2U, SE2A, SE2V, SE2P, SE2D, SE2D-F) 1370 ℃ (SE2E) 850 ℃ (SE2R)
IN FILF OUT 0.0	**Filter time constant** Sets the filter time constant. Reduces input fluctuation caused by noise. Setting range: 0.0 to 10.0 seconds	0.0 seconds
IN 4o OUT 0	**Sensor correction** Sets the sensor correction value. Input value = Current input value + (Sensor correction value) Setting range: Thermocouple, RTD input: -100.0 to 100.0 ℃ (℉) DC voltage, current input, or SE2P, SE2D, SE2D-F: -1000 to 1000	0 (SE2U, SE2A, SE2V, SE2P, SE2D, SE2D-F) 0.0 ℃ (SE2E, SE2R)
IN oUtP OUT 420A	**Output type** Selects the output type. 420A: 4 to 20 mA DC 020A: 0 to 20 mA DC 012A: 0 to 12 mA DC 010A: 0 to 10 mA DC 15A: 1 to 5 mA DC 01V: 0 to 1 V DC 05V: 0 to 5 V DC 15V: 1 to 5 V DC 010V: 0 to 10 V DC	4 to 20 mA DC
IN oUtY OUT nonL	**Output Normal/Reverse** Selects either Output Normal mode (0.0 to 100.0 %) or Reverse mode (100.0 to 0.0 %), corresponding to the input. nonL: Normal, rEVY: Reverse	Normal
IN bUrn OUT UP	**Burnout** Selects Upscale (110.0 %) or Downscale (-10.0 %) output when input indicates burnout. Available for thermocouple, RTD input. UP: Upscale, doUn: Downscale	Upscale

(*2) The minimum input span is 50 ℃ (100 ℉).

6.3.2 CH2 Function Group

To enter the CH2 function group, follow the procedures below.

(1) Fnc2 In RUN mode, press the key 4 times.

(2) YEnY Press the key. For the SE2U, Input type item appears.
For the SE2A, SE2V, SE2E, SE2R, each Input range item appears.
For the SE2P, SE2D, SE2D-F, Decimal point place item appears.

Setting items are the same as those of Section “6.3.1 CH1 Function Group” (pp.21-23).
Set up the unit referring to Section “6.3.1 CH1 Function Group”.

6.3.3 Special Function Group

Setting items are common to CH1 and CH2.

To enter the Special function group, follow the procedures below.

(1) SF.n2 In RUN mode, press the ◯ key 5 times.

(2) Lock Press the ∨ key. Set value lock item appears.

Set up the unit referring to the explanation of each item.

Display	Name, Function, Setting Range	Factory Default
IN Lock OUT ----	**Set value lock** Locks the set values to prevent setting errors. ----: Unlock Lock: Lock (None of the set values or adjusted values can be changed.)	Unlock
IN rSn OUT 250	**Input sampling period (Response time)** Selects input sampling period (response time). 25: 25 ms [65 ms (typ.) (0⟶ 90 %)] 125: 125 ms [225 ms (typ.) (0⟶ 90 %)] 250: 250 ms [425 ms (typ.) (0⟶ 90 %)]	250 ms [425 ms (typ.)(0⟶ 90 %)]
IN LIGr OUT ----	**Auto-light function** Selects Auto-light Enabled/Disabled. ---- : Disabled LIGr : Enabled	Disabled
IN dISP OUT CH1	**Display selection** Selects items to be indicated on the Input and Output displays. CH1 : CH1 Input value/Output value CH2 : CH2 Input value/Output value In : Input value (CH1, CH2) OUT : Output value (CH1, CH2) nonE : No indication (Only the Power indicator is lit)	CH1 Input value/Output value
IN TIME OUT 00.00	**Indication time** Sets the indication time of the display after the final key operation. Available when any item except nonE is selected in [Display selection]. The displays turn OFF (only the Power indicator is lit) after indication time has passed. If the ∧, ∨, ◯ or SUB-MODE Key is pressed while displays are in OFF status, or if the power is turned ON again, the displays will light again. Setting item: 00.00: Remains lit 00.01 (1 sec) to 60.00 (60 minutes) (Minutes.Seconds)	00.00 (Remains lit)

6.3.4 Using This Unit as a Standard Signal Conditioner

Set the Filter time constant to 0.0 seconds (p.23), and set the Output Normal/Reverse (p.23) to “Normal”.

6.3.5 Using the Reverse Function

This function reverses the output (100 to 0 %) that corresponds to the input (0 to 100 %). Set the Output Normal/Reverse (p.23) to “Reverse”.

6.3.6 Using the First Order Lag Filter Function

The value is outputted by performing the first order lag computation using the Filter time constant “T”. (Fig. 6.3.6-1)

Set the filter time constant (p.23) to a random value (0.0 to 10.0 seconds).

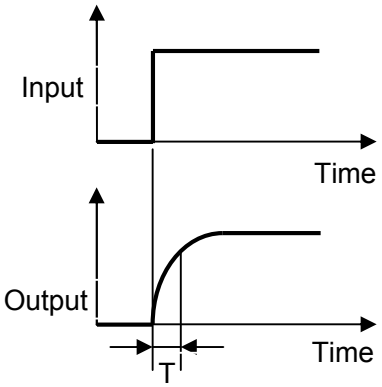

(Fig. 6.3.6-1)

7. Adjustment

Performs the Output Zero and Span Adjustments for CH1, CH2 respectively.
For the SE2P, adjust Potentiometer input Zero and Span for CH1, CH2 respectively.
Connect an mV generator or Dial resistor to the input terminals of this instrument.
Connect a Digital multimeter to the output terminals.

7.1 Basic Operation of Adjustment

Perform adjustment in the Output adjustment group.

(e.g.) To enter CH1 Output adjustment group on the SE2U

(1) In RUN mode, press the key. (Fig. 7.1-1, p.26)

(2) Press the key while CH1 Output adjustment group characters are indicated. (Fig. 7.1-2, p.26)

(3) The unit will proceed to the “Output Zero Adjustment” in CH1 Output adjustment group. For Output Zero and Span adjustment, use the or key, and register the value with the key. (Fig. 7.1-3, p.26)

For the SE2P, “Output span adjustment’ is followed by ‘Potentiometer Input Zero Adjustment’.
Potentiometer Input Zero Adjustment is automatically performed with the key.
Pressing the key registers the value.
Potentiometer Input Span Adjustment is automatically performed with the key.
Pressing the key registers the value.

If the key is pressed at the last adjustment item, the unit will revert to RUN mode.

(1) RUN Mode

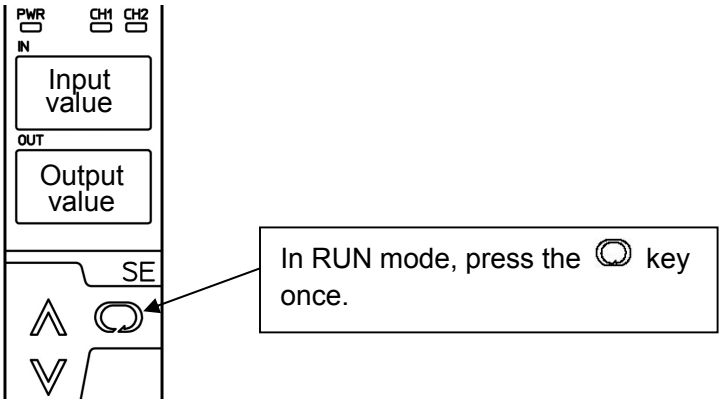

(Fig. 7.1-1)

(2) CH1 Output Adjustment Group

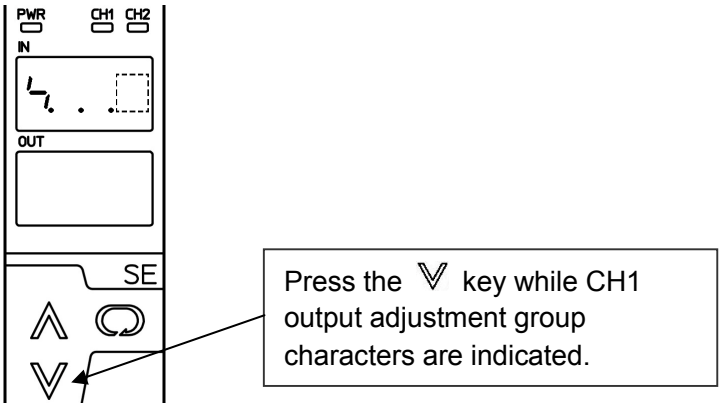

(Fig. 7.1-2)

(3) Output Zero Adjustment

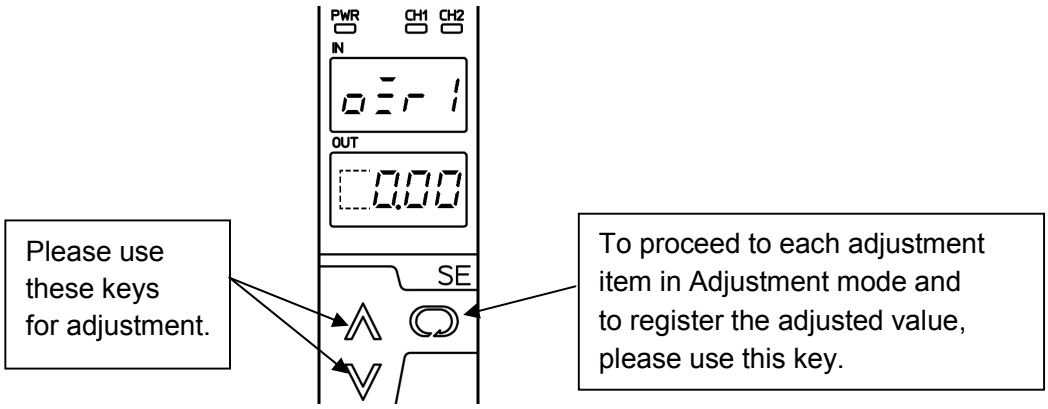

(Fig. 7.1-3)

7.2 Adjustment

7.2.1 CH1 Output Adjustment Group

To enter the CH1 output adjustment group, follow the procedures below.

(1) 5. . In RUN mode, press the key once.

(2) oZr 1 Press the key. Output Zero Adjustment item appears.

Adjust the unit referring to the explanation of each item.

Display	Name, Function, Setting Range	Factory Default
IN oZr 1 OUT 0.00	**Output Zero Adjustment** Adjusts Output Zero. Input the value corresponding to 0 % output, then adjust the value with the ∧ or ∨ key while viewing the output value (on the Digital multimeter). **When the output range lower limit is Zero, (even if Zero Adjustment results in a negative value), the output value will not be negative.** Setting range: -5.00 to 5.00 % (Effective range of adjustment differs depending on the output types.)	0.00 %
IN oSP 1 OUT 0.00	**Output Span Adjustment** Adjusts Output Span. Input the value corresponding to 100 % output, then adjust the value with the ∧ or ∨ key while viewing the output value (on the Digital multimeter). Setting range: -5.00 to 5.00 % Effective range of adjustment is 95 to 105 %.	0.00 %
IN 1 ZEr OUT -1999	**Potentiometer Input Zero Adjustment** Adjusts Potentiometer input Zero. Available only for SE2P. Set the potentiometer to the MIN side, and press the ∨ key once. Potentiometer input Zero will be automatically adjusted.	-1999
IN 1 SPA OUT 9999	**Potentiometer Input Span Adjustment** Adjusts Potentiometer input Span. Available only for SE2P. Set the potentiometer to the MAX side, and press the ∧ key once. Potentiometer input Span will be automatically adjusted.	9999

Output Type	Effective Adjustment Range
4 to 20 mA DC	-5 to 5 %
0 to 20 mA DC	0 to 5 %
0 to 12 mA DC	0 to 5 %
0 to 10 mA DC	0 to 5 %
1 to 5 mA DC	-5 to 5 %
0 to 1 V DC	0 to 5 %
0 to 5 V DC	0 to 5 %
1 to 5 V DC	-5 to 5 %
0 to 10 V DC	0 to 5 %

7.2.2 CH2 Output Adjustment Group

To enter the CH2 output adjustment group, follow the procedures below.

(1) 52. . In RUN mode, press the key twice.

(2) oZr 1 Press the key. Output Zero Adjustment item appears.

Setting items are the same as those of Section “7.2.1 CH1 Output Adjustment Group”.

Set up the unit referring to Section “7.2.1 CH1 Output Adjustment Group”.

8. Operation

8.1 Indication after Power-on

After power-on, the unit moves to warm-up status for 3 seconds as shown below (Fig. 8.1-1).

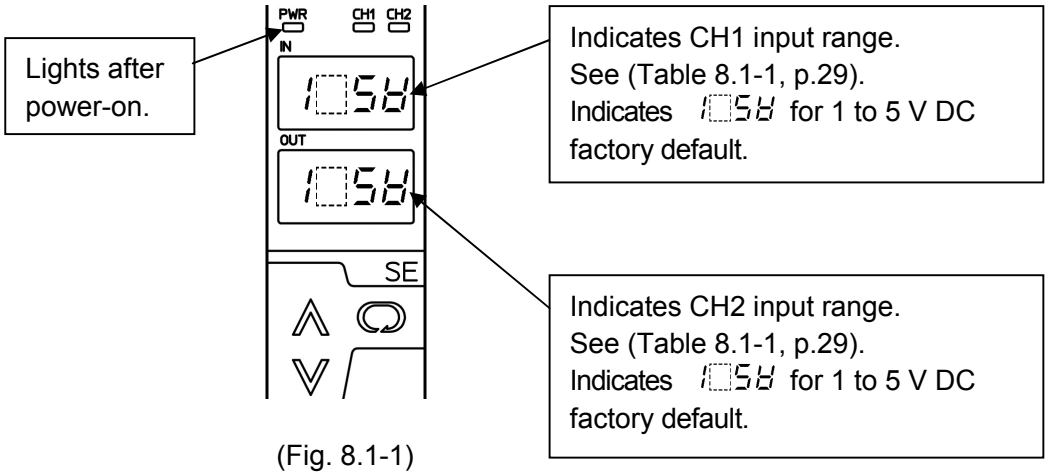

(Fig. 8.1-1)

8.2 Unit Operation

The unit enters RUN mode after 3-second warm-up. (Fig. 8.2-1)
The input selected in [Input type] is converted to the output selected in [Output type].

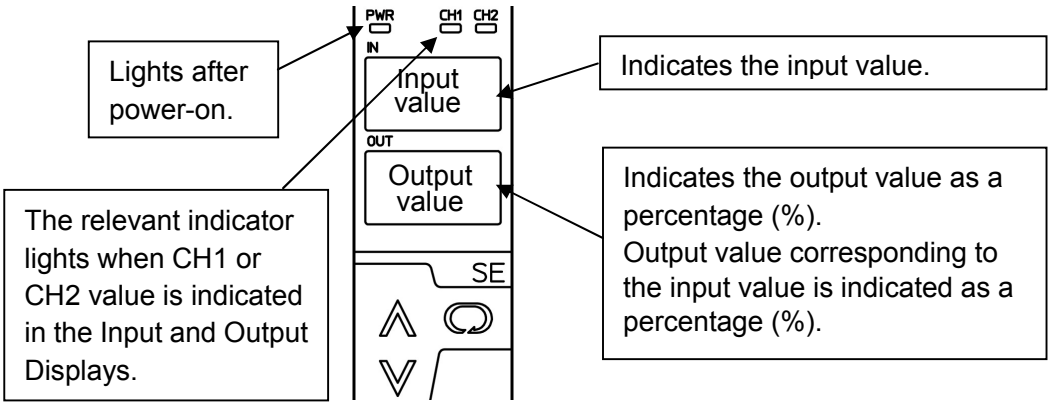

(Fig. 8.2-1)

(Table 8.1-1)

Input	Input Display	
	℃	℉
K	t□□C: -200 to 1370 ℃	t□□F: -328 to 2498 ℉
K	t□2C: -200 to 200 ℃	t□2F: -328 to 392 ℉
K	t□4C: 0 to 400 ℃	t□4F: 32 to 752 ℉
J	J□□C: -200 to 1000 ℃	J□□F: -328 to 1832 ℉
J	J□2C: -200 to 200 ℃	J□2F: -328 to 392 ℉
J	J□4C: 0 to 400 ℃	J□4F: 32 to 752 ℉
R	r□□C: -50 to 1760 ℃	r□□F: -58 to 3200 ℉
S	S□□C: -50 to 1760 ℃	S□□F: -58 to 3200 ℉
B	b□□C: 0 to 1820 ℃	b□□F: 32 to 3308 ℉
E	E□□C: -200 to 800 ℃	E□□F: -328 to 1472 ℉
T	T□□C: -200 to 400 ℃	T□□F: -328 to 752 ℉
N	n□□C: -200 to 1300 ℃	n□□F: -328 to 2372 ℉
PL-Ⅱ	PL2C: 0 to 1390 ℃	PL2F: 32 to 2534 ℉
W5Re/W26Re	c□□C: 0 to 2315 ℃	c□□F: 32 to 4199 ℉
W3Re/W25Re	d□□C: 0 to 2315 ℃	d□□F: 32 to 4199 ℉
Pt100	Pt□□C: -200 to 850 ℃	Pt□□F: -328 to 1562 ℉
Pt100	Pt 1C: -100 to 100 ℃	Pt 1F: -148 to 212 ℉
JPt100	JPtC: -200 to 500 ℃	JPtF: -328 to 932 ℉
4 to 20 mA DC	420A: -1999 to 9999	
0 to 20 mA DC	020A: -1999 to 9999	
0 to 16 mA DC	0 16A: -1999 to 9999	
2 to 10 mA DC	2 10A: -1999 to 9999	
0 to 10 mA DC	0 10A: -1999 to 9999	
1 to 5 mA DC	1□5A: -1999 to 9999	
0 to 1 mA DC	0□ 1A: -1999 to 9999	
0 to 10 mV DC	0 1mV: -1999 to 9999	
-10 to 10 mV DC	-1 1mV: -1999 to 9999	
0 to 50 mV DC	05mV: -1999 to 9999	
0 to 60 mV DC	06mV: -1999 to 9999	
0 to 100 mV DC	00.1V: -1999 to 9999	
0 to 1 V DC	0□ 1V: -1999 to 9999	
0 to 5 V DC	0□5V: -1999 to 9999	
1 to 5 V DC	1□5V: -1999 to 9999	
0 to 10 V DC	0 10V: -1999 to 9999	

• **Indication when input value is -200.0 (-2000) or less**

When the range has a decimal point: For the indication of -200.0 or less (up to –10 % output), the input value and the minus (-) sign are indicated alternately.

For DC voltage or current input, the indication of -2000 or less is the same as the above.

(e.g.) Indication of -200.0

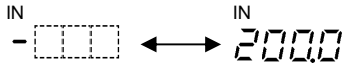

• **Indication when input value is 10000 or more**

When DC voltage or current input is selected: For the indication of 10000 or more (up to 110 % output), the lower 4 digits of input value are flashing.

(e.g.) Indication of 10020

• **Underrange, Overrange and Sensor Burnout Indication**

The following will be indicated whatever setting item is selected in [Display selection]. (p.24)

Underrange: "- - - -" flashes on the Input display.

Overrange : "‾ ‾ ‾ ‾" flashes on the Input display.

• **Indication Time Setting**

If indication time (p.24) is set, the displays will go off after the indication time has elapsed. (Only the Power indicator remains lit.)

If power is turned ON again, or if any of the keys ∧, ∨, ◎ or the SUB-MODE Key is pressed while displays are unlit, the displays will light again.

9. Specifications

Input Specifications

SE2U (Thermo-couple)
SE2E

Input resistance: 1 MΩ or more
External resistance: 100 Ω or less, However, B: 40 Ω or less
Burnout: Upscale, Downscale (Selectable by keypad)
Input:

Thermocouple	Input Range	
K	-200 to 1370 ℃	-328 to 2498 ℉
J	-200 to 1000 ℃	-328 to 1832 ℉
R	-50 to 1760 ℃	-58 to 3200 ℉
S	-50 to 1760 ℃	-58 to 3200 ℉
B	0 to 1820 ℃	32 to 3308 ℉
E	-200 to 800 ℃	-328 to 1472 ℉
T	-200 to 400 ℃	-328 to 752 ℉
N	-200 to 1300 ℃	-328 to 2372 ℉
PL-Ⅱ	0 to 1390 ℃	32 to 2534 ℉
W5Re/W26Re	0 to 2315 ℃	32 to 4199 ℉
W3Re/W25Re	0 to 2315 ℃	32 to 4199 ℉

The minimum input span is 50 ℃ (100 ℉).

SE2U (RTD),
SE2R

Input detection current: Approx. 0.2 mA
Allowable lead wire resistance: 10 Ω or less per wire
Burnout: Upscale, Downscale (Selectable by keypad)
Input:

RTD	Input Range	
Pt100	-200 to 850 ℃	-328 to 1562 ℉
JPt100	-200 to 500 ℃	-328 to 932 ℉

The minimum input span is 50 ℃ (100 ℉).

SE2U (Direct current),
SE2A

Input	Shunt Resistor
4 to 20 mA DC	50 Ω
0 to 20 mA DC	
0 to 16 mA DC	
2 to 10 mA DC	100 Ω
0 to 10 mA DC	
1 to 5 mA DC	200 Ω
0 to 1 mA DC	1 kΩ

Connect a shunt resistor (sold separately) between input terminals.

SE2U (DC voltage),
SE2V

Input	Input Resistance	Allowable signal source resistance
0 to 10 mV DC	1 MΩ	20 Ω or less
-10 to 10 mV DC		40 Ω or less
0 to 50 mV DC		200 Ω or less
0 to 60 mV DC		
0 to 100 mV DC		
0 to 1 V DC		2 kΩ or less
0 to 5 V DC		1 kΩ or less
1 to 5 V DC		
0 to 10 V DC		

SE2D, SE2D-F	<table><tr><th>Input</th><th>Shunt Resistor</th></tr><tr><td>4 to 20 mA DC</td><td>50 Ω built-in</td></tr></table>
SE2P	**Potentiometer** Total resistance: 100 Ω to 10 kΩ Excitation: 1.0 V DC

Output Specifications

When the output range lower limit is zero, (even if Zero Adjustment results in a negative value), the output value will not be negative.

Direct current	<table><tr><th>Output</th><th>Allowable load resistance</th><th>Zero adjustment range</th><th>Span adjustment range</th></tr><tr><td>4 to 20 mA DC</td><td>700 Ω or less</td><td>-5 to 5 %</td><td>95 to 105 %</td></tr><tr><td>0 to 20 mA DC</td><td>700 Ω or less</td><td>0 to 5 %</td><td>95 to 105 %</td></tr><tr><td>0 to 12 mA DC</td><td>1.2 kΩ or less</td><td>0 to 5 %</td><td>95 to 105 %</td></tr><tr><td>0 to 10 mA DC</td><td>1.2 kΩ or less</td><td>0 to 5 %</td><td>95 to 105 %</td></tr><tr><td>1 to 5 mA DC</td><td>2.4 kΩ or less</td><td>-5 to 5 %</td><td>95 to 105 %</td></tr></table>
DC voltage	<table><tr><th>Output</th><th>Allowable load resistance</th><th>Zero adjustment range</th><th>Span adjustment range</th></tr><tr><td>0 to 1 V DC</td><td>100 Ω or more</td><td>0 to 5 %</td><td>95 to 105 %</td></tr><tr><td>0 to 5 V DC</td><td>500 Ω or more</td><td>0 to 5 %</td><td>95 to 105 %</td></tr><tr><td>1 to 5 V DC</td><td>500 Ω or more</td><td>-5 to 5 %</td><td>95 to 105 %</td></tr><tr><td>0 to 10 V DC</td><td>1 kΩ or more</td><td>0 to 5 %</td><td>95 to 105 %</td></tr></table>

Power supply for 2-wire transmitter (SE2D, SE2D-F)

Output voltage	24 to 28 V DC (when load current is 20 mA DC)
Ripple voltage	Within 200 mV DC (when load current is 20 mA DC)
Max load current	25 mA DC
Output impedance (SE2D-F)	240 Ω (Suitable for Field communicator usage)

Performance

Accuracy (at 23 ℃)	SE2U (thermocouple input), SE2E: Within ±0.1 % of each input span R, S inputs -50 to 200 ℃ (-58 to 392 ℉): Within ±6 ℃ (12 ℉) B input 0 to 300 ℃ (32 to 572 ℉): Accuracy is not guaranteed. K, J, E, T, N inputs, less than 0 ℃ (32 ℉): Within ±0.4 % of each input span SE2U (RTD input), SE2R: Within ±0.1 % of each input span SE2U (DC voltage, current input), SE2A, SE2V, SE2P, SE2D, SE2D-F: Within ±0.1 % Output: Within ±0.1 %
Cold junction compensation accuracy	Within ±1 ℃ at -5 to 55 ℃ [SE2U (thermocouple input), SE2E]

Indication accuracy	Within Accuracy (input) ±1 digit
Input sampling period	25 ms, 125 ms, 250 ms (Selectable by keypad)
Response time	65 ms (typ.) (0 → 90 %) (Input sampling period 25 ms) 225 ms (typ.) (0 → 90 %) (Input sampling period 125 ms) 425 ms (typ.) (0 → 90 %) (Input sampling period 250 ms)
Temperature coefficient	±0.015 %/℃ or less
Insulation resistance	Input – Output – Power: 10 MΩ or more, at 500 V DC
Dielectric strength	Input – Output – Power: 2.0 kV AC for 1 minute

General Structure

Case	Flame-resistant resin, Color: Light gray
Front panel	Membrane sheet
Setting	Setting by the front keypad
Console connector	For the CMB-001 (USB communication cable)
Displays, Indicators	Input display: 7-segment 4-digit Red LED display Character size:10 x 4.6 mm (H x W) Output display: 7-segment 4-digit Red LED display Character size: 10 x 4.6 mm (H x W) Power indicator: Green LED CH1 indicator: Yellow LED CH2 indicator: Yellow LED

Installation Specifications

Power supply	100 to 240 V AC 50/60 Hz, 24 V AC/DC 50/60 Hz
Allowable voltage range	85 to 264 V AC, 20 to 28 V AC/DC
Power consumption	Approx. 8 VA
Ambient temperature	-5 to 55 ℃ (23 to 131 ℉)
Ambient humidity	35 to 85 %RH (Non-condensing)
Weight	Approx. 190 g (Socket included)
Mounting	DIN rail mounting
Dimensions	30 (W) x 88 (H) x 108 (D) mm (Socket included)

Attached Function

Auto-light function	Display brightness is controlled from the front light sensor after measurement, saving energy.
Power failure countermeasure	The setting data is backed up in the non-volatile IC memory.
Self-diagnosis	The CPU is monitored by a watchdog timer, and if an abnormal status is found on the CPU, the controller is switched to warm-up status. At this time all outputs are turned OFF.
Cold junction temperature compensation	This detects the temperature at the connecting terminal between the thermocouple and the instrument, and always maintains it at the same status as if the reference junction location temperature was at 0 ℃ (32 ℉). Available for the SE2U (thermocouple input), SE2E.

10. Troubleshooting

10.1 Indication

Problem	Possible Cause and Solution
The Input display is flashing "- - - -" or "‾ ‾ ‾ ‾".	• The sensor may be burnt out. Change each sensor. • Check whether the sensor is securely connected to the input terminals of the instrument. Ensure that the sensor terminals are securely connected to the input terminals of the instrument. • Check the input signal source. • Check whether polarity of thermocouple or compensating lead wire is correct. Check whether codes (A, B, B) of the RTD match the instrument terminals. Ensure that they are wired properly.
The indication of the Input display is irregular or unstable.	• Check whether the sensor input and temperature unit (℃/℉) setting are correct. Ensure that sensor type and temperature unit (℃/℉) are set properly. • Check whether the sensor correction value is suitable. Set it to a suitable value. • AC leaks into the sensor circuit. Use an ungrounded type sensor. • There may be equipment that interferes with or makes noise near the unit. Keep equipment that interferes with or makes noise away from the unit. Keep the unit clear of any potentially disruptive equipment.

10.2 Key Operation

Problem	Possible Cause and Solution
Setting or adjustment is not possible.	• 'Lock' is selected in [Set value lock]. Select 'Unlock'.

10.3 Operation

Problem	Possible Cause and Solution
Input value does not change.	• The sensor may be out of order. Change the sensor.
	• Check whether input and output wires are securely connected to the I/O terminals of the instrument. Ensure that input and output wires are securely connected to the I/O terminals. • Check whether the wiring of input and output is correct.
No output	• Check whether Output 100 % value and Output 0 % value are set to suitable values. • Check whether output type is selected correctly in [Output type], and whether Output Normal/Reverse is selected correctly in [Output Normal/Reverse].

11. Character Table

Factory defaults are indicated in the following tables.

CH1/CH2 Function Group

CH1 and CH2 have respective setting items.

Display	Setting Item	Factory Default	Data
sEns	Input type	DC voltage (SE2U)	
Tc□□	Thermocouple input range	K -200 to 1370 ℃ (SE2E)	
rTd□	RTD input range	Pt100 -200 to 850 ℃ (SE2R)	
dcA□	Direct current input range	4 to 20 mA DC -1999 to 9999 (SE2A)	
dcb□	DC voltage input range	1 to 5 V DC -1999 to 9999 (SE2U, SE2V)	
dP□□	Decimal point place	No decimal point	
sTLL	Output 0 % value	-1999 (SE2U, SE2A, SE2V, SE2P, SE2D, SE2D-F) -200 ℃ (SE2E, SE2R)	
sTLH	Output 100 % value	9999 (SE2U, SE2A, SE2V, SE2P, SE2D, SE2D-F) 1370 ℃ (SE2E) 850 ℃ (SE2R)	
FILT	Filter time constant	0.0 sec	
so□□	Sensor correction	0 (SE2U, SE2A, SE2V, SE2P, SE2D, SE2D-F) 0.0 ℃ (SE2E, SE2R)	
oUTP	Output type	4 to 20 mA DC	
oUTs	Output Normal/Reverse	Normal	
bUrn	Burnout	Upscale (SE2E, SE2R)	

Special Function Group

(Common to CH1 and CH2)

Display	Setting Item	Factory Default	Data
Lock	Set value lock	Unlock	
r□Ta	Input sampling period (Response time)	250 ms [425 ms (typ.) (0 → 90 %)]	
LIGT	Auto-light function	Disabled	
diSP	Display selection	CH1 Input value/Output value	
TIME	Indication time	00.00 (Remains lit)	

Output Adjustment Group

CH1 and CH2 have respective setting items.

Display	Setting Item	Factory Default	Data
oZr1	Output zero adjustment	0.00 %	
oSP1	Output span adjustment	0.00 %	
1ZEr	Potentiometer input zero adjustment	-1999 (SE2P)	
1SPA	Potentiometer input span adjustment	9999 (SE2P)	

****** Inquiries ******

For any inquiries about this unit, please contact the vendor where you purchased the unit or our agency after checking the following.

(e.g.)

- Model .....……. SE2U-1-0
- Serial number …..... No.09KF05000

In addition to the above, please let us know the details of malfunction, or discrepancy, and the operating conditions.

SHINKO TECHNOS CO., LTD.
OVERSEAS DIVISION

Head Office: 2-5-1, Senbahigashi, Minoo, Osaka, Japan
URL: http://www.shinko-technos.co.jp Tel: +81-72-727-6100
E-mail: overseas@shinko-technos.co.jp Fax: +81-72-727-7006

No.SE2x1E1 2013.09