PLC INTERFACE UNIT

SIF-400

INSTRUCTION MANUAL

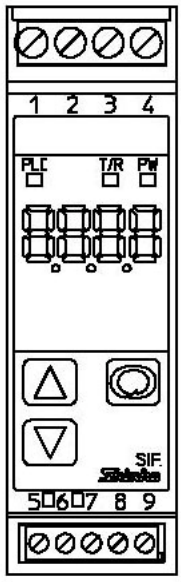

Shinko

Preface

Thank you for purchasing our PLC interface unit SIF-400.

This manual contains instructions for the mounting, functions, operations and notes when operating the SIF-400. For model confirmation and unit specifications, please read this manual carefully before starting operation.

To prevent accidents arising from the misuse of this instrument, please ensure the operator receives this manual.

Abbreviations used in this manual

Symbol	Term
PV	Process variable
SV	Desired value

Notes

- This instrument should be used in accordance with the specifications described in the manual. If it is not used according to the specifications, it may malfunction or cause a fire.
- Be sure to follow the warnings, cautions and notices. If they are not followed, serious injury or accidents may occur.
- The contents of this instruction manual are subject to change without notice.
- Care has been taken to ensure that the contents of this instruction manual are correct, but if there are any doubts, mistakes or questions, please inform our sales department.
- This instrument is designed to be mounted on a DIN rail. If it is not, measures must be taken to ensure that the operator cannot touch power terminals or other high voltage sections.
- Any unauthorized transfer or copying of this document, in part or in whole, is prohibited.
- Shinko Technos CO., LTD. is not liable for any damage or secondary damage(s) incurred as a result of using this product, including any indirect damage.

Safety precautions (Be sure to read these precautions before using our products.)

The safety precautions are classified into categories: “Warning” and “Caution”.
Depending on the circumstances, procedures indicated by ⚠ Caution may cause serious results, so be sure to follow the directions for usage.

⚠ Warning

Procedures which may lead to dangerous conditions and cause death or serious injury, if not carried out properly.

⚠ Caution

Procedures which may lead to dangerous conditions and cause superficial to medium injury or physical damage or may degrade or damage the product, if not carried out properly.

⚠ Safety precautions

- To ensure safe and correct use, thoroughly read and understand this manual before using this instrument.
- This instrument is intended to be used for industrial machinery, machine tools and measuring equipment. Verify correct usage after consulting purpose of use with our agency or main office. (Never use this instrument for medical purposes with which human lives are involved.)
- External protection devices must be installed, as malfunction of this product could result in serious damage to the system or injury to personnel. Also proper periodic maintenance is required.
- This instrument must be used under the conditions and environment described in this manual. Shinko Technos Co., Ltd. does not accept liability for any injury, loss of life or damage occurring due to the instrument being used under conditions not otherwise stated in this manual.

Caution with respect to Export Trade Control Ordinance

To avoid this instrument from being used as a component in, or as being utilized in the manufacture of weapons of mass destruction (i.e. military applications, military equipment, etc.), please investigate the end users and the final use of this instrument.

In the case of resale, ensure that this instrument is not illegally exported.

1. Installation precautions

⚠ Caution

This instrument is intended to be used under the following environmental conditions (IEC61010-1): Overvoltage category Ⅱ, Pollution degree 2

Ensure the mounting location corresponds to the following conditions:

- A minimum of dust, and an absence of corrosive gases
- No flammable, explosive gases
- No mechanical vibrations or shocks
- No exposure to direct sunlight, an ambient temperature of 0 to 50℃ (32 to 122℉) that does not change rapidly, and no icing
- An ambient non-condensing humidity of 35 to 85%RH
- No large capacity electromagnetic switches or cables through which large current is flowing
- No water, oil or chemicals or where the vapors of these substances can come into direct contact with the unit
- When installing this unit within a control panel, take note that ambient temperature of this unit must not exceed 50℃. Otherwise the life of electronic components (especially electrolytic capacitors) may be shortened.

Note: Avoid setting this instrument directly on or near flammable material even though the case of this instrument is made of flame-resistant resin.

2. Wiring precautions

⚠ Caution

- Do not leave bits of wire in the instrument, because they could cause fire or malfunction.
- Insert the connecting cable into the designated connector securely to prevent malfunction.
- Connect the wire for the AC power source with its designated terminal as described in this instruction manual.
  The SIF-400 will be damaged if the AC power source wire is connected to a different terminal.
- Use correct fitting ferrules with an insulation sleeve for the terminal screw when wiring the SIF-400.
- Tighten the terminal screw with the specified torque.
  If excessive force is applied to the screw when tightening, the screw or case may be damaged.
- When using a 24V DC for the power source, do not confuse polarity.
- When wiring, keep communication wires away from AC sources to avoid external interference.
- This instrument has neither a built-in power switch nor a fuse. Therefore, it is necessary to install them in the circuit near the external unit.
  (Recommended fuse: Time-lag fuse, rated voltage 250V AC, rated current 2A)

3. Operation and maintenance precautions

⚠ Warning

- Do not touch live terminals. This may cause electric shock or problems in operation.
- Turn the power supply to the instrument OFF before retightening the terminal or cleaning.
  Working or touching the terminal with the power switched ON may result in severe injury or death due to Electric Shock.
- Use a soft, dry cloth when cleaning the instrument.
  (Alcohol based substances may tarnish or deface the unit.)
- As the display section is vulnerable, do not strike or scratch it with a hard object.

--- CONTENTS ---

1. Overview

1.1 Overview ---------- 5
1.2 System configuration ---------- 6
1.3 Data exchange ---------- 6

2. Model

2.1 Model ---------- 7
2.2 How to read the model label ---------- 7

3. Name and functions of the sections ---------- 7

4. Mounting

4.1 Site selection ---------- 8
4.2 External dimensions ---------- 8
4.3 Mounting to the DIN rail ---------- 8
4.4 Removal from the DIN rail ---------- 9

5. Wiring

5.1 Ferrules ---------- 10
5.2 Terminal arrangement ---------- 10
5.3 Connecting to digital indicating controllers
5.3.1 Connecting to a DCL-33A ---------- 11
5.3.2 Connecting to the JCx-33A series ---------- 12
5.3.3 Connecting to a NCL-13A ---------- 13
5.4 Connecting to a PLC
5.4.1 Connecting to a Mitsubishi PLC ---------- 13
5.4.2 Connecting to an Omron PLC ---------- 17
5.4.3 Connecting to a Fuji PLC ---------- 19
5.4.4 Connecting to a Yokogawa PLC ---------- 20
5.4.5 Connecting to an LG PLC ---------- 21

6. Setup ---------- 22

6.1 Operation flowchart ---------- 24
6.2 Parameter setting mode ---------- 25

7. Operations

7.1 Flexible address selection (memory allocation per item) ---------- 30
7.2 Flexible address selection (memory allocation per channel) ---------- 38
7.3 Fixed address ---------- 44

8. Specifications ---------- 45

9. Troubleshooting ---------- 46

10. Default value ---------- 47

1. Overview

1.1 Overview

The SIF-400 is a unit to interface between a PLC and a maximum of 32 units of digital indicating controllers (DCL-33A, JCx-33A or NCL-13A).
The SIF-400 stores data of the controllers in the PLC register, and exchanges data by reading and resetting the PLC flag.

There are 3 types of memory allocation for the PLC as follows.

- **Flexible address selection (Memory allocation per item)** (See p.30.)
- **Flexible address selection (Memory allocation per channel)** (See p.38.)
- **Fixed address** (See p.44.)

With Flexible address selection, top address, the number of controllers (DCL-33A, JCx-33A or NCL-13A) connected with the SIF-400 and Communication item Used/Unused can be designated by the PLC side software such as ladder software.
Flexible address types can reduce the register capacity that the SIF-400 occupies.

With Fixed address, the predetermined communication items [data quantity for the connected controllers (20 units)] are written to or read from the register area. Initial setting is not necessary on the PLC side.

PLC memory allocation	Flexible address selection (Memory allocation per item) (P.27)	Flexible address selection (Memory allocation per channel) (P.34)	Fixed address (P.40)
Register Area that SIF occupies	Number of connected controllers: 10 Top address: D1000 PV reading and SV setting		Number of connected controllers: 10 When selecting D0000 to D0399.
	D1010 to D1019: SV D1020 to D1029: PV	D1010: Instrument 0 SV D1011: Instrument 0 PV D1012: Instrument 1 SV D1013: Instrument 1 PV ⋮ D1029: Instrument 9 PV	D0000 to D0019: SV ⋮ D0260 to D0279: PV
Initial setting on the PLC side	Required	Required	Not required
Number of connected controllers	Max. 32 units	Max. 32 units	Max. 20 units
Advantage	• Register Area can be reduced since Communication item Used/Unused can be designated arbitrarily.	• Register Area can be reduced since Communication item Used/Unused can be designated arbitrarily. • Addresses remain unchanged even if number of connected controllers increases or decreases.	• Initial setting of the PLC is not required. • Addresses remain unchanged even if number of connected controllers increases or decreases. (constantly 20 units)
Disadvantage	• Initial setting of the PLC is required. • Addresses change when number of connected controllers increases and decreases.	• Initial setting of the PLC is required.	• Communication items are predetermined, so the register area is limited.

1.2 System configuration

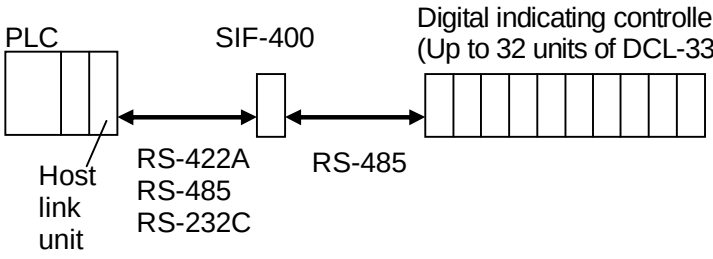

The DCL-33A, JCx-33A or NCL-13A cannot be used together.
(*: For Fixed address type, up to 20 units of controller can be connected.)

PLCs corresponding to SIF-400, its manufacturer and host link units

PLC manufacturer	PLC model	Host link unit model
Mitsubishi Electric Corp.	MELSEC A (A, AnA) Q series, QnA series MELSEC FX2N series	AJ71UC24 A1SJ71UC24-R2/R4/PRF A1SJ71C24-R2/R4/PRF, QJ71C24
Omron Corp.	SYSMAC C200H series CS series CJ series	LK201-V1, LK202-V1 CS1W-SCU21-V1 CJ1W-SCU21, CJ1W-SCU41
Fuji Electric Co., Ltd.	MICREX-F series	NC1L-RS2, NC1L-RS4
Yokogawa Electric Corp.	FA-M3 series	F3LC11-1F, F3LC11-1N, F3LC12-1F, F3LC11-2N
LG Industrial Systems	MASTER-K series	G7L-CUEB, G7L-CUEC

1.3 Data exchange

Each instrument carries out the following functions through data exchange.

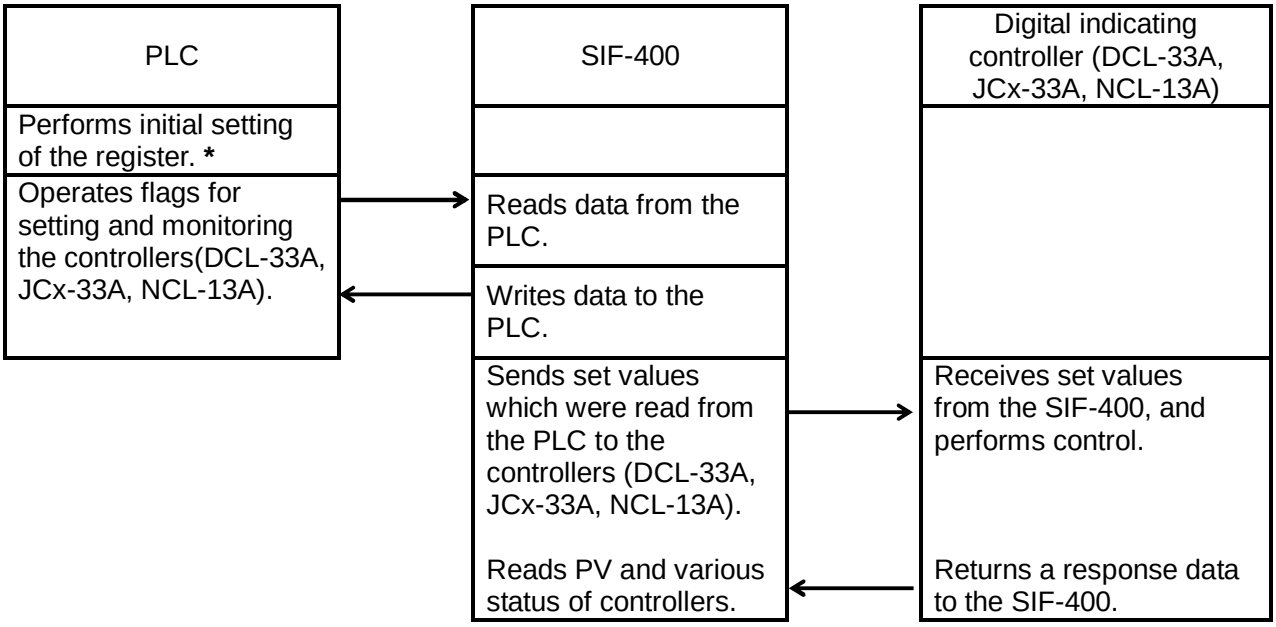

The SIF-400 does not manage the setting range of the controllers (DCL-33A, JCx-33A, NCL-13A). When setting the values from the PLC, they must be within the setting range.

*** Initial setting is necessary when Flexible address selection type is selected during PLC memory allocation selection.**

2. Model

2.1 Model: SIF-400

2.2 How to read the model label

> **⚠ Warning**
>
> **Turn the power supply to the instrument off before checking the model label.**
> **Working or touching the terminal with the power switched on may result in severe injury or death due to Electric Shock.**

Model labels are attached to the case and the inner assembly. See (Fig. 2.2-1).

Model label (e.g.)

SIF-400	Model
No.xxxxxx	Serial number (Only on the inner assembly)

(Fig. 2.2-1)

3. Name and functions of the sections

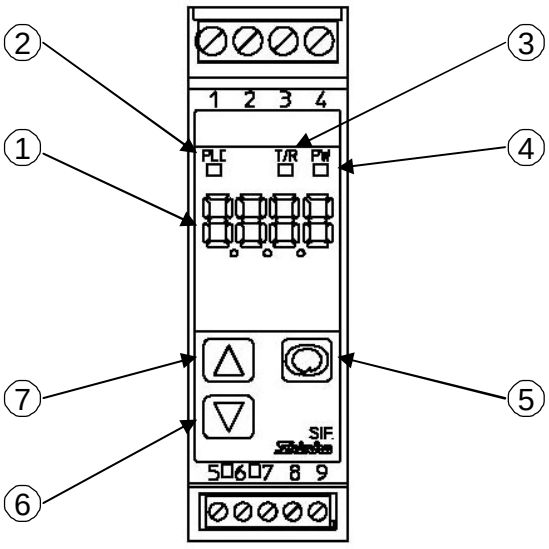

(Fig. 3-1)

① **Parameter display**:
Indicates communication status and parameter setting item.

② **PLC communication indicator (yellow)**
Flashes while communicating with the PLC.
(Lit while sending data, Unlit while receiving data)

③ **Controller communication indicator (yellow)**
Flashes while communicating with the digital indicating controllers**.**
(Lit while sending data, Unlit while receiving data)

④ **Power indicator (green)**:
Lights when the power is supplied to the instrument.

⑤ **Mode key (◯)**:
Selects a setting mode or registers the set value.

⑥ **Decrease key (▽)**:
Decreases the numeric value, or switches the selection item.

⑦ **Increase key (△)**:
Increases the numeric value, or switches the selection item.

4. Mounting

4.1 Site selection

This instrument is intended to be used under the following environmental conditions (IEC61010-1): Overvoltage category Ⅱ, Pollution degree 2

Ensure the mounting location corresponds to the following conditions:

- A minimum of dust, and an absence of corrosive gases
- No flammable, explosive gases
- No mechanical vibrations or shocks
- No exposure to direct sunlight, an ambient temperature of 0 to 50℃ (32 to 122℉) that does not change rapidly, and no icing
- An ambient non-condensing humidity of 35 to 85%RH
- No large capacity electromagnetic switches or cables through which large current is flowing
- No water, oil or chemicals or where the vapors of these substances can come into direct contact with the unit
- When installing this unit within a control panel, take note that ambient temperature of this unit must not exceed 50℃. Otherwise the life of electronic components (especially electrolytic capacitors) may be shortened.

4.2 External dimensions (scale: mm)

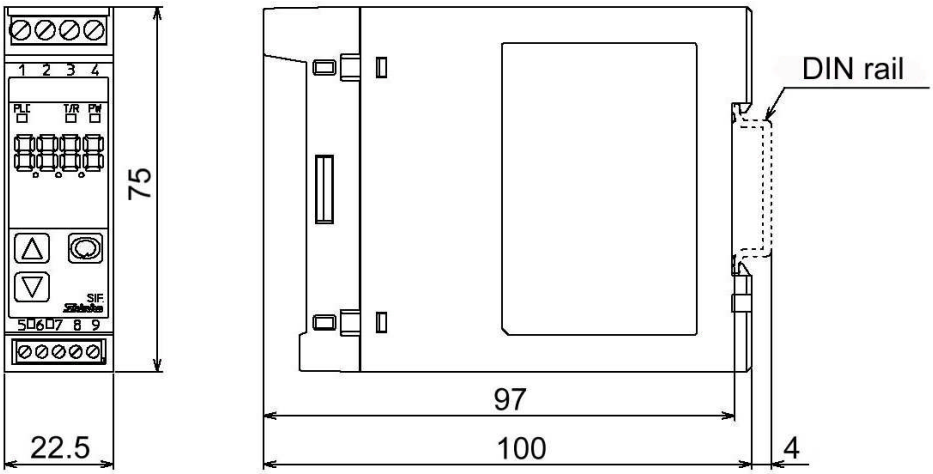

(Fig. 4.2-1)

4.3 Mounting to the DIN rail

⚠ Caution

Mount the DIN rail horizontally.
When the DIN rail is mounted vertically, be sure to use commercially available fastening plates at the end of the SIF-400. Mount the SIF-400 to the DIN rail so that the SIF-400 may be fixed. However, if the DIN rail is mounted horizontally in a position susceptible to vibration or shock, the fastening plates must be used as well.

- **Fastening plates**

Omron Corporation	End plate	PFP-M
IDEC Corporation	Fastening plate	BNL6
Matsushita Electric Works, LTD.	Fastening plate	ATA4806

First, hook ① of the SIF-400 on the upper side of the DIN rail. See (Fig. 4.3-1) on p.9.

Second, making ① part of the SIF-400 as a support, fit the lower part of the SIF-400 to the DIN rail. SIF-400 will be completely fixed to the DIN rail with a “Click” sound. See (Fig. 4.3-1) on p.9.

4.4 Removal from the DIN rail

⚠ Caution

A flat blade screwdriver is required for removing the SIF-400 from the DIN rail.
Do not turn the screwdriver when releasing the lever for removal.
If excessive force is applied to the lever for removal, it may be damaged.

①: Put a flat blade screwdriver to the lever, and pull down the lever with it. (Fig. 4.4-1)
②: The lock to the DIN rail will be released.
Be careful that the unit does not drop to the ground when it is removed. (Fig. 4.4-1)

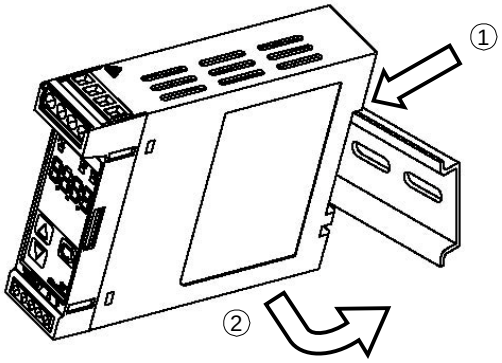

(Fig. 4.3-1) Mounting

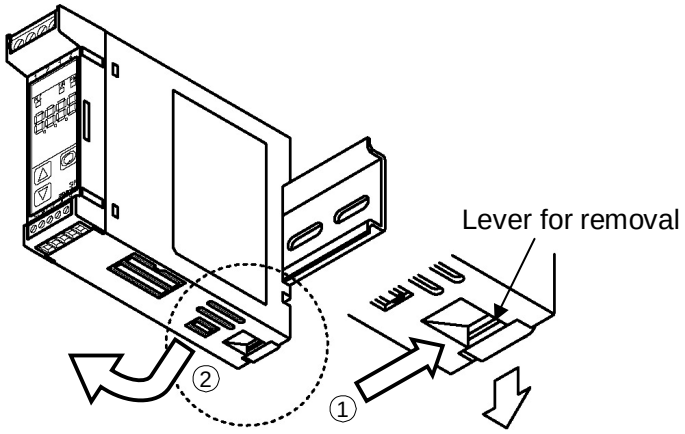

(Fig. 4.4-1) Removal

5. Wiring

⚠ Warning

Turn the power supply to the instrument off before wiring.
Working or touching the terminal with the power switched on may result in severe injury or death due to Electric Shock.

⚠ Caution

- Do not leave bits of wire in the instrument, because they could cause fire or malfunction.
- Insert the connecting cable into the designated connector securely to prevent malfunction.
- Connect the wire for AC power source with its designated terminal as described in this instruction manual. The SIF-400 will be damaged if the AC power source wire is connected to a different terminal.
- Use the ferrules with an insulation sleeve that fits to the terminal screw when wiring the terminal block of the SIF-400.
- Tighten the terminal screw with the specified torque. If excessive force is applied to the screw when tightening, the screw or case may be damaged.
- When using a 24V DC for the power source, do not confuse polarity.
- When wiring, keep communication wires away from AC sources to avoid external interference.
- This instrument has neither a built-in power switch nor a fuse. Therefore, it is necessary to install them in the circuit near the external unit. (Recommended fuse: Time-lag fuse, rated voltage 250V AC, rated current 2A)

5.1 Ferrules

When using ferrules, use the following recommended ferrules and crimping pliers made by Phoenix Contact GMBH &CO. See (Table 5.1-1).

Take note that terminal screws and tightening torque differ depending on a terminal number.

(Table 5.1-1)

Terminal number	Terminal screw	Ferrules with insulation sleeve	Conductor cross sections	Tightening torque	Crimping pliers
1 to 4	M2.6	AI 0.25-8 YE	0.2 to 0.25mm^2	0.5 to 0.6N・m	CRIMPFOX ZA 3 CRIMPFOX UD 6
		AI 0.34-8 TQ	0.25 to 0.34mm^2		
		AI 0.5-8 WH	0.34 to 0.5mm^2		
		AI 0.75-8 GY	0.5 to 0.75mm^2		
		AI 1.0-8 RD	0.75 to 1.0mm^2		
		AI 1.5-8 BK	1.0 to 1.5mm^2		
5 to 9	M2.0	AI 0.25-8 YE	0.2 to 0.25mm^2	0.22 to 0.25N・m	
		AI 0.34-8 TQ	0.25 to 0.34mm^2		
		AI 0.5-8 WH	0.34 to 0.5mm^2		

5.2 Terminal arrangement

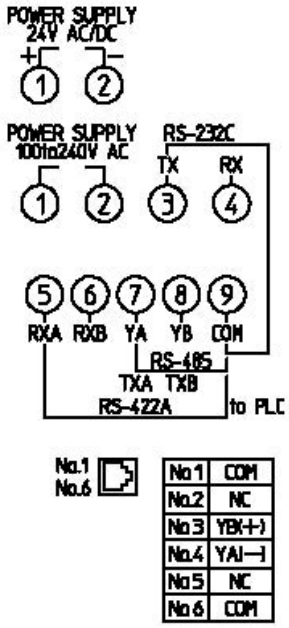

Modular jack (Bottom of the unit)

(Fig. 5.2-1)

• to PLC: Terminals for communication with the PLC
RS-232C, RS-422A, RS-485

• Modular jack: For communication with controllers (RS-485)

5.3 Connecting to digital indicating controllers

The instrument number of the controllers should be set from 0 (zero) in numerical order.

5.3.1 Connecting to a DCL-33A

Connection between the SIF-400 and DCL-33A

Using communication cable CDD (sold separately) or CPP (sold separately), connect to the modular jack.

Cable length of CDD: 60mm. For distances larger than 60mm, use the CPP cable.

Cable length of CPP: 500mm.

For distances larger than 500mm, the CPP can be extended in units of 500mm fixed length.

For distances less than 500mm, the CPP can be cut down in units of 100mm fixed length.

Connection between DCL-33A units

Using communication cable CDD (sold separately), connect to the modular jack.

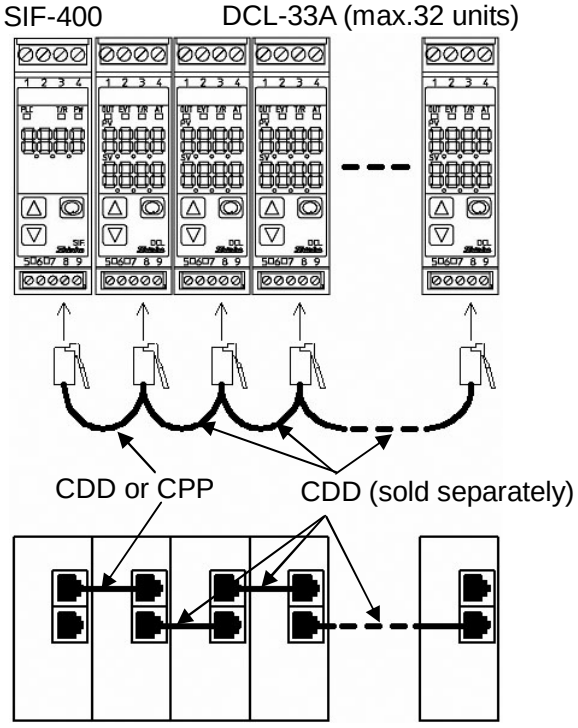

Bottom of the SIF-400, DCL-33A

(Fig. 5.3.1-1)

5.3.2 Connecting to the JCx-33A series

Connection between SIF-400 and JCx-33A series

Using communication cable CDM (sold separately), connect to the modular jack of the SIF-400, and to YA(-), YB(+) and SG terminals of the JCx-33A series.

Cable length of CDM: 3000mm

The CDM cable can be extended in units of 1000mm fixed length.

Connection between JCx-33A series

Using a shielded wire, connect YA(-) with YA(-), YB(+) with YB(+), SG with SG terminals respectively.

Connect only one side of the shielded wire to the FG terminal so that current cannot flow to the shielded wire.

If both sides of the shielded wire are connected to the FG terminal, the circuit will be closed between the shielded wire and the ground. As a result, current will run through the shielded wire and this may cause noise.

Be sure to ground the FG terminal.

Recommended cable: OTSC-VB 2PX0.5SQ (made by Onamba Co., Ltd.) or equivalent (Use a twisted pair cable)

The following diagram shows connection, using the JCS-33A.

Terminal numbers of the JCx-33A series differ depending on the model. Refer to the following.

CDM	JCL-33A	JCS-33A	JCR-33A	JCM-33A	JCD-33A
4	(10) YA(-)	(13) YA(-)	(11) YA(-)	(10) YA(-)	(11) YA(-)
3	(11) YB(+)	(14) YB(+)	(14) YB(+)	(13) YB(+)	(14) YB(+)
1, 6	(12) SG	(15) SG	(17) SG	(14) SG	(17) SG

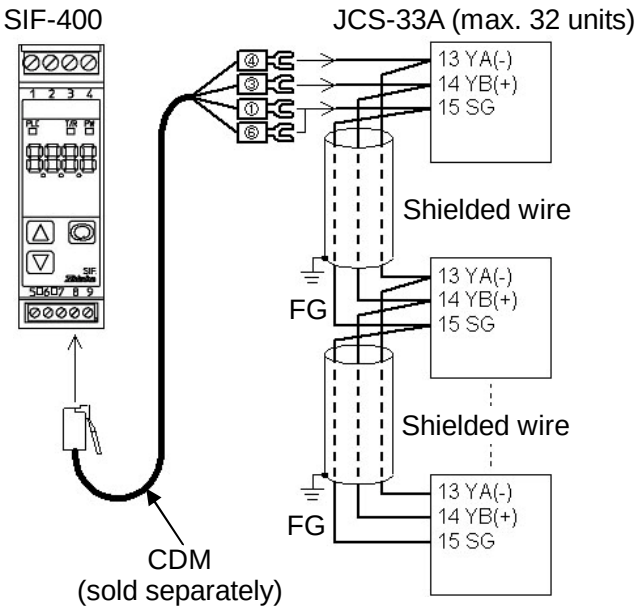

(Fig. 5.3.2-1)

5.3.3 Connecting to a NCL-13A

Connection between SIF-400 and NCL-13A

Using communication cable CNS (sold separately), connect to the modular jack of the SIF-400. For NCL-13A, connect to terminals C(COM), A(YA), B(YB) of Screw type plug for lines (Terminal block ATB-001-1), using the CNS.

Cable length of CNS: 500mm

The CNS cable can be extended in units of 500mm fixed length.

Connection between NCL-13A units

Connects between bus plugs.

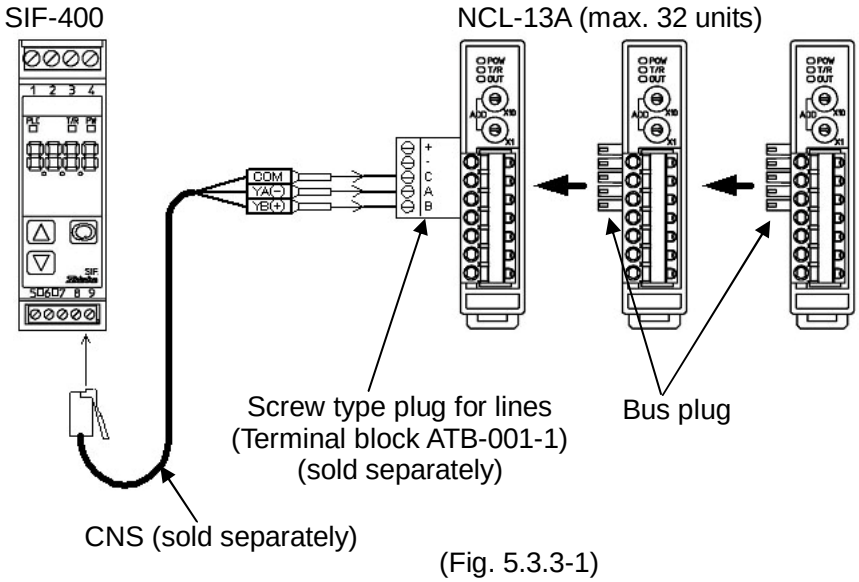

(Fig. 5.3.3-1)

5.4 Connecting to a PLC

5.4.1 Connecting to a Mitsubishi PLC

● **Setup of Mitsubishi Calculator link unit (AJ71UC24)**

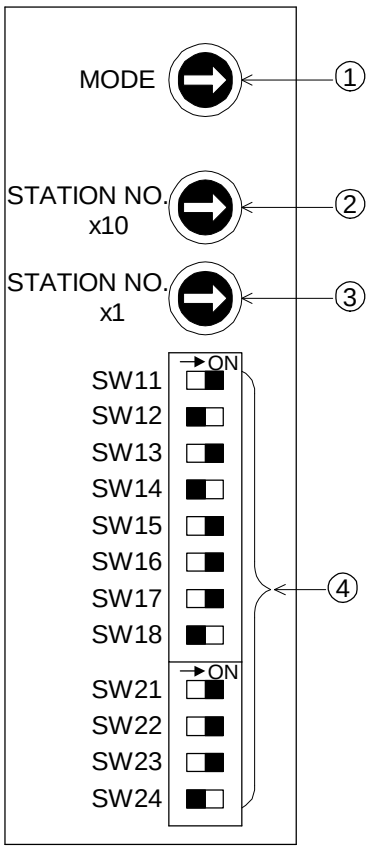

(Fig. 5.4.1-1)

① Sets the transmission control procedure (protocol) and control procedure of RS-422/RS-232C.
Set to 8 (Format 4).

② Sets the double digit instrument number (x10).
Set the number to 0.

③ Sets the single digit instrument number (x1).
Set the number to 0.

④ Sets the transmission specifications.
See (Table 5.4.1-1) on p.14.
Set the items except baud rate to ▭ .

(Table 5.4.1-1)

Setting SW	Setting item		Setting switch ON	Setting switch OFF
SW11	Main channel		RS-422	RS-232C
SW12	Data bit		8 bits	7 bits
	Communication speed	Baud rate	9600bps	19200bps
SW13			ON	OFF
SW14			OFF	ON
SW15			ON	ON
SW16	Parity		Yes	No
SW17	Even/Odd parity		Even	Odd
SW18	Stop bit		2 bits	1 bit
SW21	Checksum		Yes	No
SW22	Writing during RUN		Possible	Impossible
SW23	Calculator link/multi-drop link		Calculator link	Multi-drop link
SW24	Unused		——	——

● **Setup of Mitsubishi Calculator link unit (A1SJ71UC24-R4)**

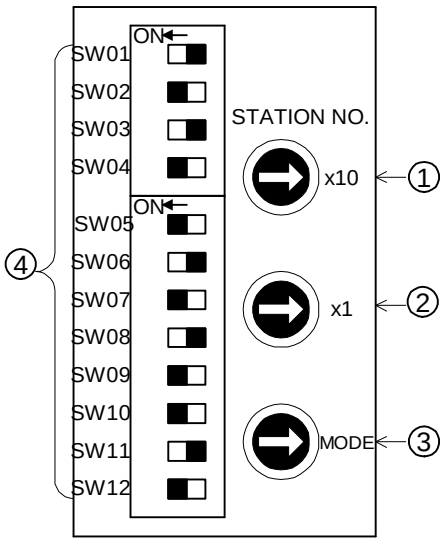

(Fig. 5.4.1-2)

① Sets the double digit instrument number (x10).
Set the number to 0.

② Sets the single digit instrument number (x1).
Set the number to 0.

③ Sets the transmission control procedure (protocol) and control procedure of RS-422/RS-232C.
Set to 8 (Format 4).

④ Sets the transmission specifications.
See (Table 5.4.1-2) .
Set the items except for the baud rate to .

(Table 5.4.1-2)

Setting switch	Setting item		Setting switch ON	Setting switch OFF
SW01	Unused		——	——
SW02	Calculator link/multi-drop link		Calculator link	Multi-drop link
SW03	Unused		——	——
SW04	Writing during run		Possible	Impossible
	Communication speed	Baud rate	9600bps	19200bps
SW05			ON	OFF
SW06			OFF	ON
SW07			ON	ON
SW08	Data bit		8 bits	7 bits
SW09	Parity		Yes	No
SW10	Even/Odd parity		Even	Odd
SW11	Stop bit		2 bits	1 bit
SW12	Checksum		Yes	No

● **Setup of Mitsubishi Micro PLC (FX2N-XXMR)**

Set up the station number (0) and communication of no procedure or communication of the calculator link (communication format D8120) which uses designated protocol via programming.

FX series can be set using program or parameter setting software (GX Developer) [FX_2(FX), FX_{2C}, FX_{0N} cannot be set using the GX Developer]. However, when setting is needed simultaneously using both, setting by the GX Developer has priority.

For the setting method, refer to the User's manual (Communication control) for the FX series.

Specification of communication format D8120 (Set the items to ▭ except the baud rate.)

- Communication format is decided by setting the values of (Table 5.4.1-3) in the Special data register (D8120) of the PLC via programming.
- When the setting is changed, be sure to turn the power supply to the PLC OFF, then ON. Otherwise the changed data will not take effect.

(Table 5.4.1-3)

Bit No.	Name	Contents	
		0 (Bit OFF)	1 (Bit ON)
b0	Data bit	7 bits	8 bits
b1 b2	Parity	b2, b1 (1, 1): Even	
b3	Stop bit	1 bit	2 bits
b4 b5 b6 b7	Baud rate (bps)	b7, b6, b5, b4 (1, 0, 0, 0): 9600bps (1, 0, 0, 1): 19200bps	Must be specified
b8	Header	No	Yes
b9	Terminator	No	Yes
b10 b11	Control cable	b11, b10 (0, 0): RS-485 interface	
b12	Not usable		
b13	Checksum	Not applied	Applied
b14	Protocol	Unused	Used
b15	Control procedure	Format 1	Format 4

- **Communication format setting**

When setting the contents of (Table 5.4.1-3), set the program in the special data register (D8120) of the PLC as follows.

When the baud rate is 9600bps

```
          b15                          b0
D8120 = [1110     0000     1000     0110 ]
           E        0        8        6
```

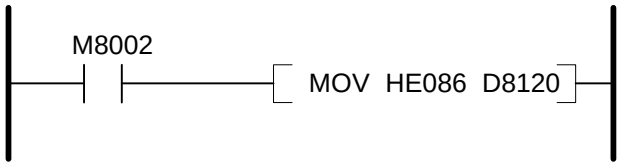

When the baud rate is 19200bps

```
          b15                          b0
D8120 = [1110     0000     1001     0110 ]
           E        0        9        6
```

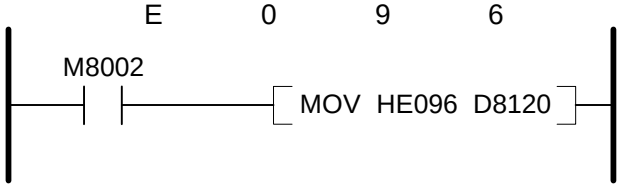

- **Station number setting**

Be sure to set the station number to 0 (zero).

Set the program in the special data register (D8121) of the PLC as follows.

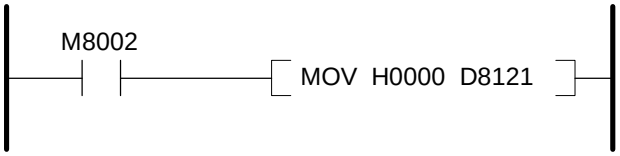

● **Setup of Serial communication unit (QJ71C24)**

Install the GX Developer to a host computer, perform settings such as communication speed, transmission specification and communication protocol, then set up the unit with PC writing function. For the setting method, refer to the User's manual for Serial communication unit (Basic).

• Setting from the GX Developer:

(1) I/O allocation setting

Set the following items.

- Type: "Intelligent"
- Model: QJ71C24
- Number of points: 32

(2) Switch setting for I/O unit, Intelligent function unit

Set the following items.

- Transmission setting (Action setting: Independent, Data bit: 7, Parity bit: Yes (Even), Stop bit: 1, Checksum code: Yes, Writing during RUN: Allowed, Setting change: Allowed)
- Communication speed setting (9600bps or 19200bps)
- Communication protocol setting (Format 4)

● **Connection**

RS-422A

Using the communication cable CFP-C4 (sold separately), connect the unit. Refer to (Fig. 5.4.1-3) below.

Calculator link unit: AJ71UC24,
A1SJ71UC24-R4, A1SJ71C24-R4
Micro PLC: FX2N-XXMR
Serial communication unit: QJ71C24

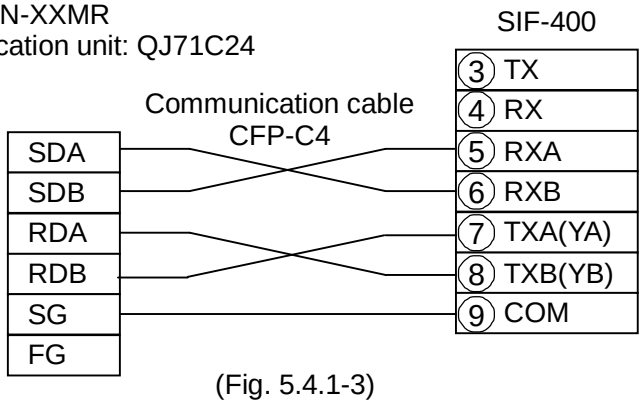

(Fig. 5.4.1-3)

RS-232C

Using the communication cable CFP-CP2 (sold separately), connect the unit. Refer to (Fig. 5.4.1-4) below.

Calculator link unit: AJ71UC24,
A1SJ71UC24-R4, A1SJ71C24-R2/PRF
Micro PLC: FX2N-XXMR
Serial communication unit: QJ71C24

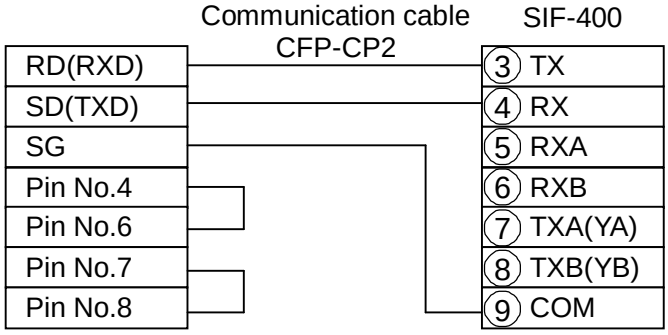

(Fig. 5.4.1-4)

5.4.2 Connecting to an Omron PLC

● **Setup of Omron Host link unit (C200H-LK202-V1)**

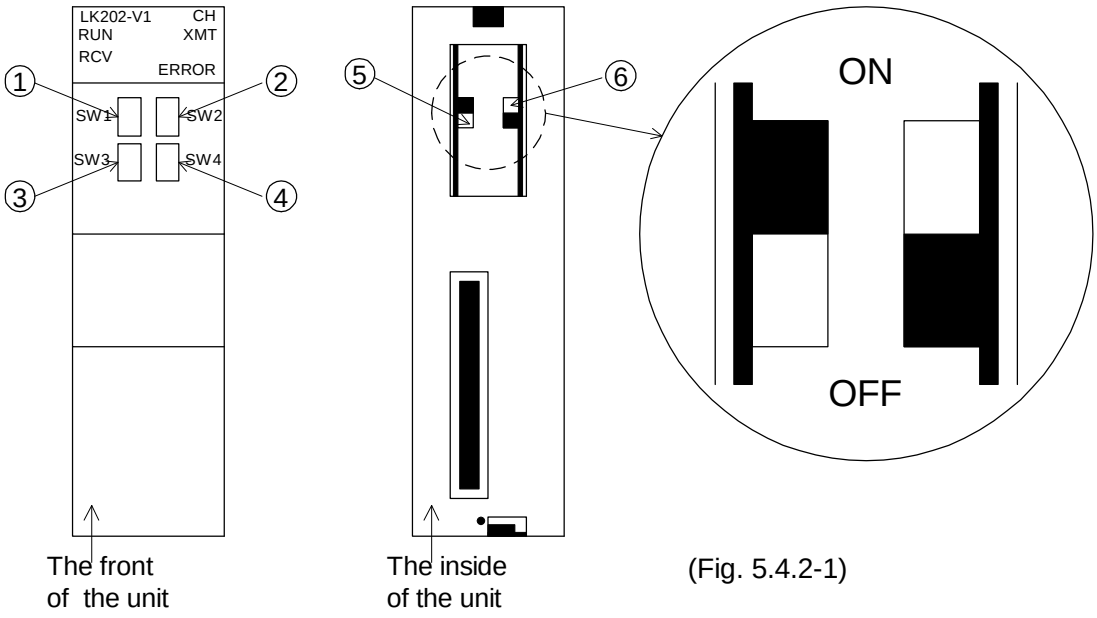

(Fig. 5.4.2-1)

① Sets the double digit instrument number (x10). Set the number to 0.
② Sets the single digit instrument number (x1). Set the number to 0.
③ Sets the communication speed.
Set the communication speed to switch No.5 (9600bps) or No.6 (19200bps).
④ Sets the command level, parity and transmission code. Select switch No.2 to set them.
⑤ Sets the terminator Connected or Not connected. Set the terminator to Connected (ON).
⑥ Sets the procedure of 1:1 or 1:N. Set to 1:N procedure (OFF).

● **Setup of Serial communication unit (CS1W-SCU21-V1, CJ1W-SCU21, CJ1W-SCU41)**

For setup, refer to Users' manual (Man. No. SBCD-300G) for Serial communication unit.

① Turn "TERM" (terminator ON/OFF switch) ON, and set "WIRE" (2-wire/4-wire switch) to "4".
This setting is for the "CJ1W-SCU41". For the CS1W-SCU21-V1, CJ1W-SCU21, go to step ②.
② Connect a personal computer, and start CX-Programmer.
③ Create I/O table of the PC while off-line (Fig. 5.4.2-2).
Select [CS/CJ/CPU SIO unit] – [Serial Communication Unit] – [Unit number].
④ Set allocation DM area of the serial communication unit.
Set allocation DM area by programming on-line connection and action mode (Fig. 5.4.2-3).
(e.g.) When installing the serial communication unit next to the CPU unit, and when UNIT No. is set to "0":
Set D30000 to 8500H (random setting, host link communication, Data bit: 7, Stop bit: 2, Parity: Yes/Even), and set D30001 to 0007H (19200bps).

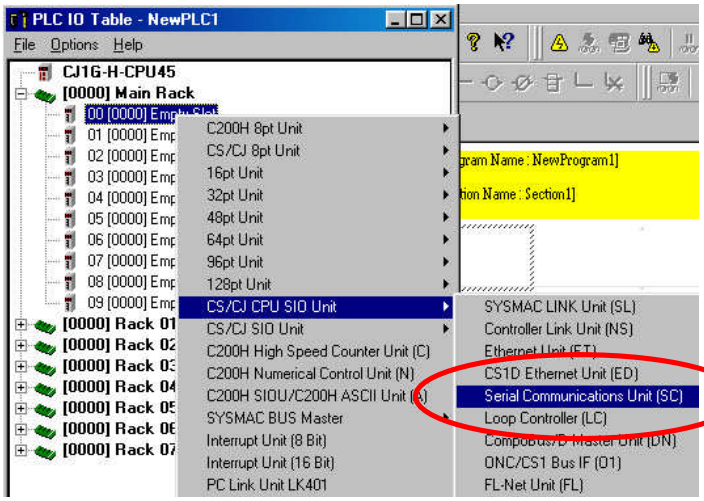

(Fig.5.4.2-2)

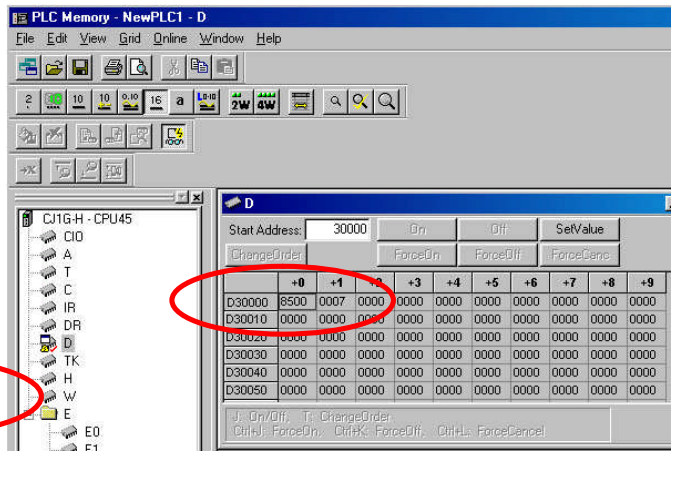

(Fig.5.4.2-3)

⑤ Transmit the following to CPU unit.
Transmit the program, PC system setting and I/O table by clicking "Transmit [PC→ PC]" on the menu bar.

● **Connection**

Connect units using a communication cable, referring to the tables below.

RS-422A

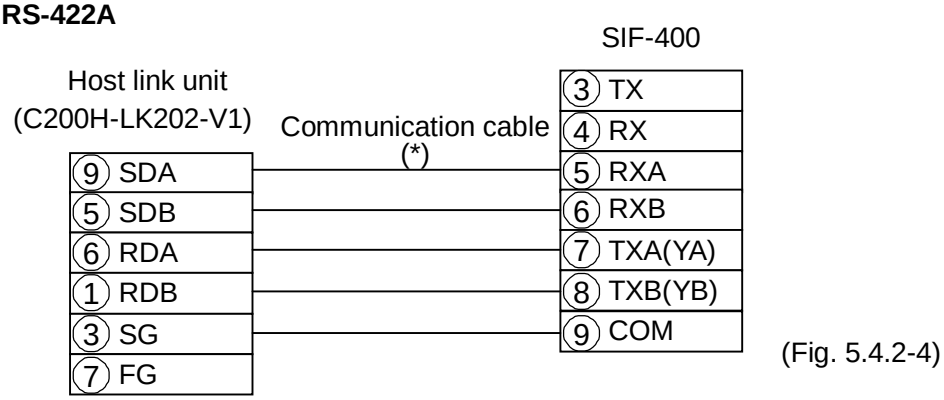

(Fig. 5.4.2-4)

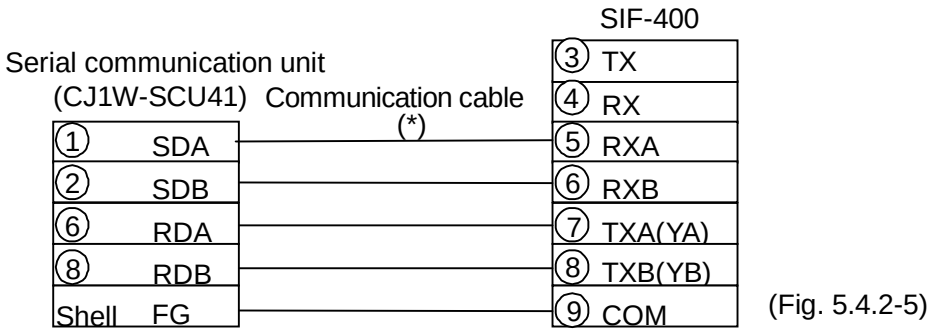

(Fig. 5.4.2-5)

RS-232C

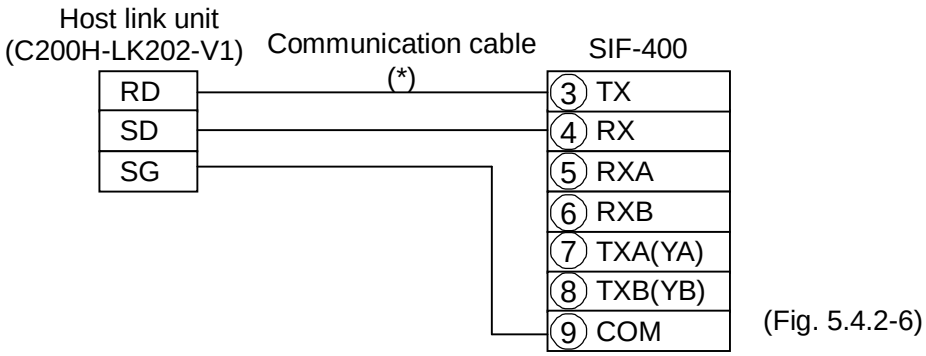

(Fig. 5.4.2-6)

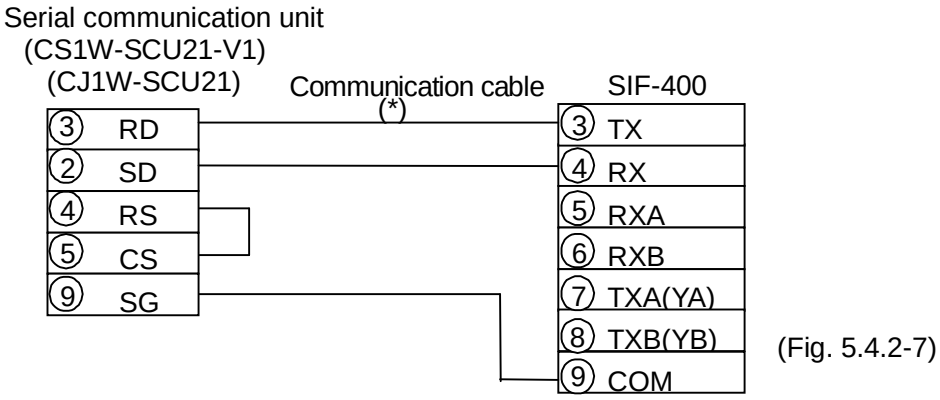

(Fig. 5.4.2-7)

(*) For the Communication cable, consult our agency or the shop where you purchased the unit.

5.4.3 Connecting to a Fuji PLC

● **Setup of Interface module (NC1L-RS4)**

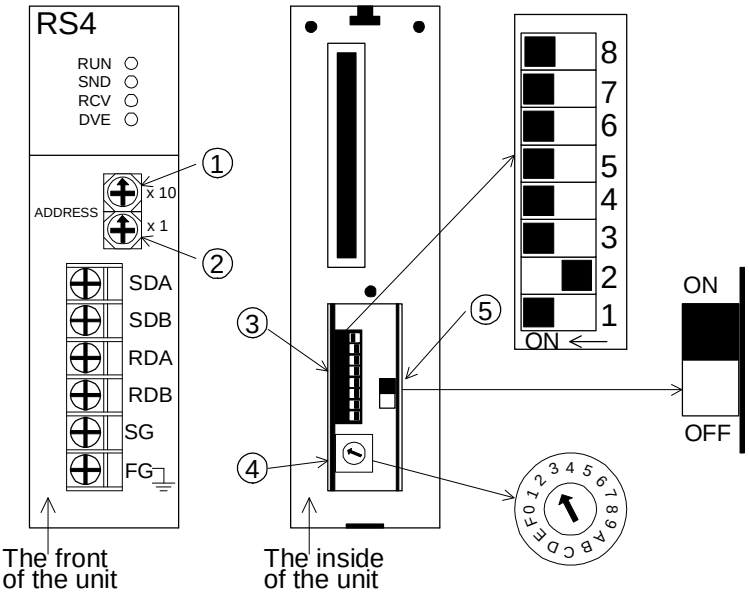

(Fig. 5.4.3-1)

① Sets the double digit instrument number (x10). Set the number to 0.
② Sets the single digit instrument number (x1). Set the number to 0.
③ Sets the transmission specification. Refer to (Table 5.4.3-1).
Set the baud rate to either 9600bps or 19200bps. (e.g. 9,600bps)
Set to ▭ except the baud rate.
④ Sets the transmission mode.
Select the switch No.3 to set.
⑤ Sets the terminator Connected (ON) or Not connected (OFF).
Set it to the terminator Connected (ON).

(Table 5.4.3-1)

Baud rate / SW No.	300bps	600bps	1,200bps	2,400bps	4,800bps	9,600bps	19,200bps	Unused
1	OFF	ON	OFF	ON	OFF	ON	OFF	ON
2	OFF	OFF	ON	ON	OFF	OFF	ON	ON
3	OFF	OFF	OFF	OFF	ON	ON	ON	ON

SW No.	Setting item	Setting switch ON	Setting switch OFF
4	Stop bit	1 bit	2 bits
5	Data bit	7 bits	8 bits
6	Even/Odd parity	Even	Odd
7	Parity	Yes	No
8	Initial setup	Switch setting valid	Initial file

● **Connection**

RS-422A: Connect the unit using communication cable CFP-C4 (sold separately). Refer to (Fig. 5.4.3-2).

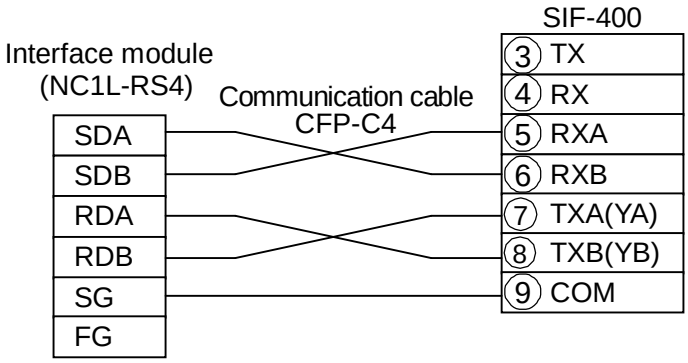

(Fig. 5.4.3-2)

RS-232C: Connect the unit using a communication cable. Refer to (Fig. 5.4.3-3).

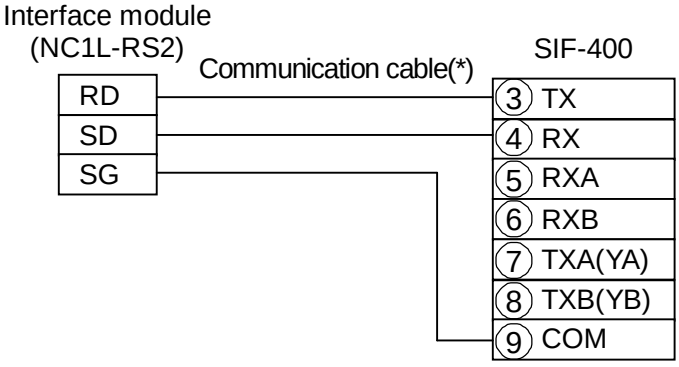

(*) For the communication cable, please contact our agency or the shop where you purchased the unit.

(Fig 5.4.3-3)

5.4.4 Connecting to a Yokogawa PLC

For the setup and wiring, refer to the Instruction manual for the Personal computer link module.

● **Setup of Personal computer link module (F3LC11-2N)**

① Sets the station number setting switch (double digit). Set it to “0”.

② Sets the station number setting switch (single digit). Set it to “1”.

③ Sets the terminator switch. Select “4-WIRE”.

④ Sets the transmission speed setting switch. For baud rate, set it to 9,600bps or 19,200bps.

⑤ Sets the data setting switch. Set to ▬. Refer to (Table 5.4.4-1) below.

(Table 5.4.4-1)

SW No.	Function	Setting switch OFF	Setting switch ON
1	Data bit	7 bits	8 bits
2	Parity bit	No	Yes
3	Odd/Even parity	Odd	Even
4	Stop bit	1 bit	2 bits
5	Checksum	No	Yes
6	End of text (CR)	No	Yes
7	Protection function	No	Yes
8	OFF		

● **Connection**

Connect the unit using communication cable CFP-C4 (sold separately). Refer to (Fig. 5.4.4-1) below.

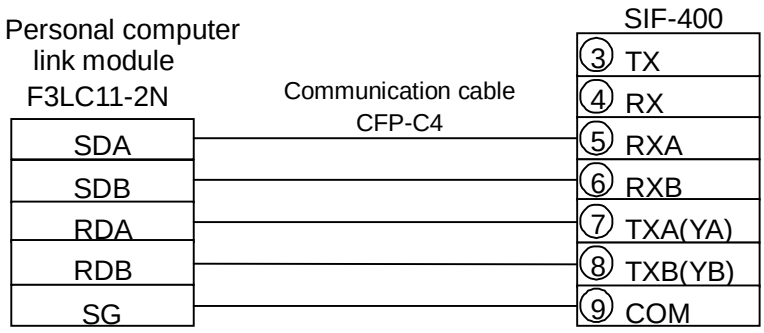

(Fig. 5.4.4-1)

5.4.5 Connecting to an LG PLC

● **Setup of MASTER-K series**

Connect a PC to which KGL for Windows was installed to the MASTER-K series. After setting Communication Method, Protocol and Mode, etc., set up the MASTER-K series, using the writing function.

For setup, refer to the User's manual for the MASTER-K series.

(1) Setting from the KGL for Windows

Communication setting of parameters:

Set the following:

Communication method (Communication: Disable, Station number: 0, Baud rate: 19200, Data bit: 7, Parity bit: Even, Stop bit: 1)

Communication channel: RS232C Null Modem or RS422/485),

Protocol and Mode (Dedicated: Slave) See (Fig. 5.4.5-1).

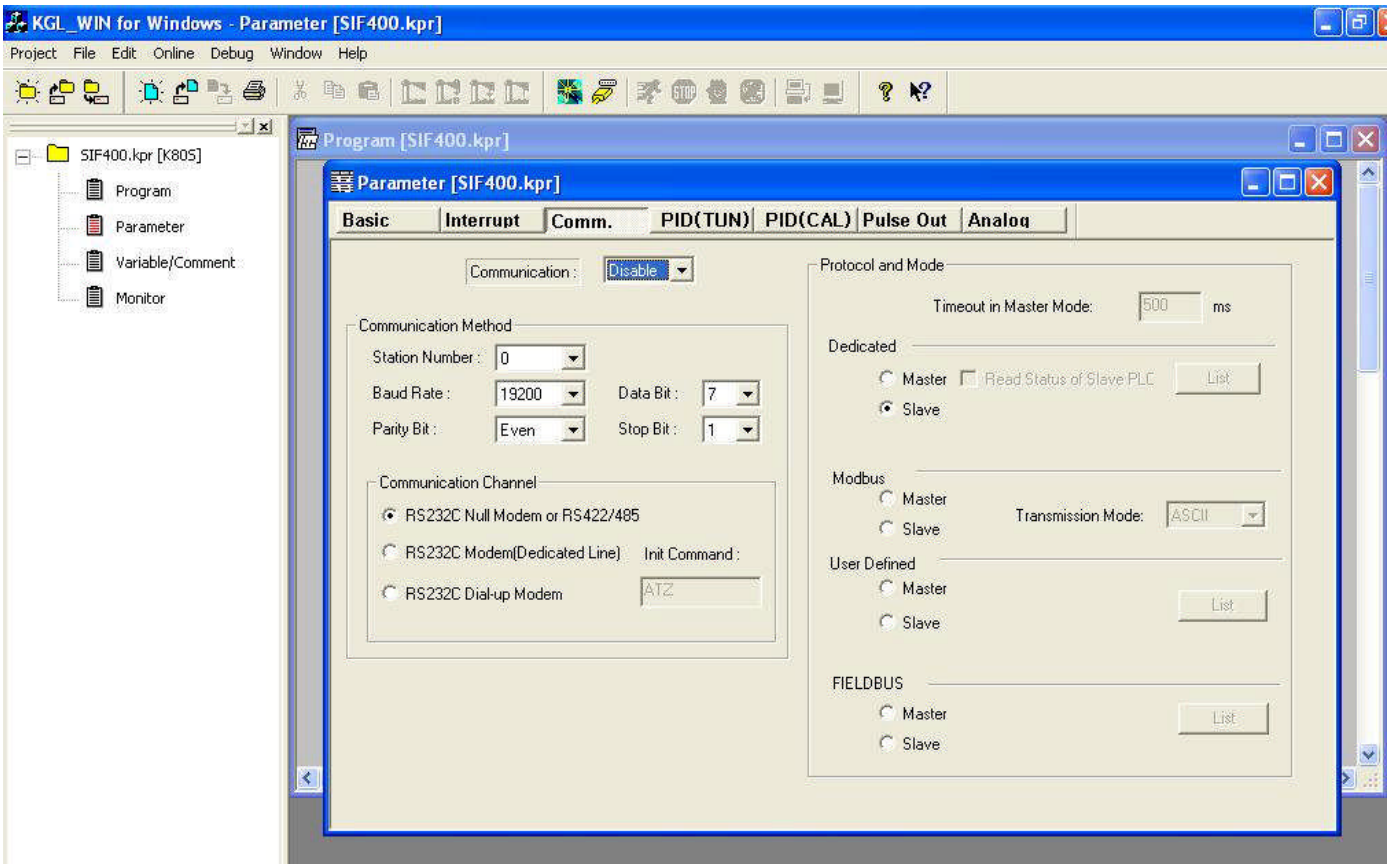

(Fig. 5.4.5-1)

(2) Writing

Click "Online" - "Write[KGLWIN=>PLC]" on the menu bar, and write to MASTER-K series.

● **Connection**

Connect as shown below, using communication cable CFP-C5 (sold separately).

Refer to the (Fig. 5.4.5-2).

COM terminal is not used, so insulate it.

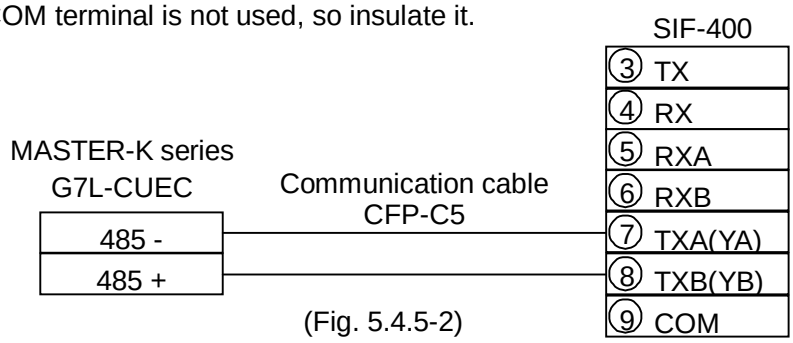

(Fig. 5.4.5-2)

6. Setup

Setup should occur before using this instrument, to select the controller model, the number of connected controllers, the PLC model, memory allocation, etc. according to the users' conditions.
Default value is set as shown (Table 6-1) below.
If the users' specification is the same as the default value of the SIF-400, it is not necessary to set up the instrument. Proceed to Chapter "7. Running".

(Table 6-1)

Setting item	Default value
Controller model	DCL-33A
Number of connected controllers	1 unit
Controller communication speed	9600bps
PLC model	Mitsubishi MELSEC D register QR/QW command
PLC memory address	0
PLC memory allocation	Flexible address selection (memory allocation per item)
PLC communication speed	9600bps
PLC data bit	7 bits
PLC parity	Even
PLC stop bit	1 bit
PLC instrument number	0

● **Turn the power supply to the SIF-400 ON**

If "Flexible address selection" is selected during the PLC memory allocation, the following will be indicated until the SIF-400 identifies Communication parameter setting completion flag 1 or 2 which is set in the PLC register. See (Fig. 6-1).

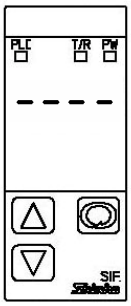

(Fig. 6-1)

If 'Fixed address" is selected during the PLC memory allocation, or when Communication parameter setting completion flag 1 or 2 has been identified, the PW (Power) indicator is turned ON, and the other indicators are turned OFF.
LED indication on the Parameter display repeatedly rotates in a clockwise direction as follows. See (Fig. 6-2).

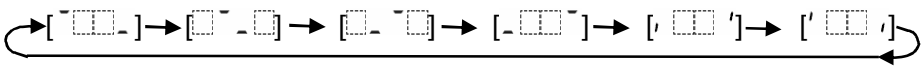

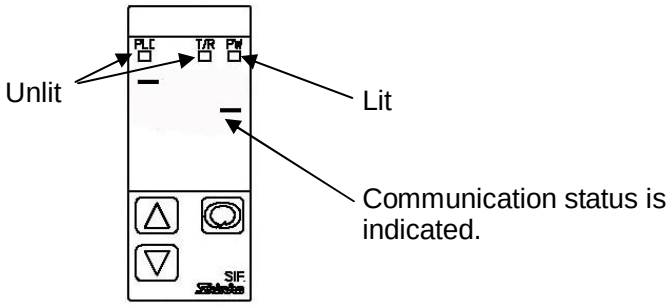

(Fig. 6-2)

After that, communication between the controller and PLC starts. This status is referred to as the Communication mode. See (Fig. 6-3).
Indication on the Parameter display differs depending on the communication status. See (Table 6-2).

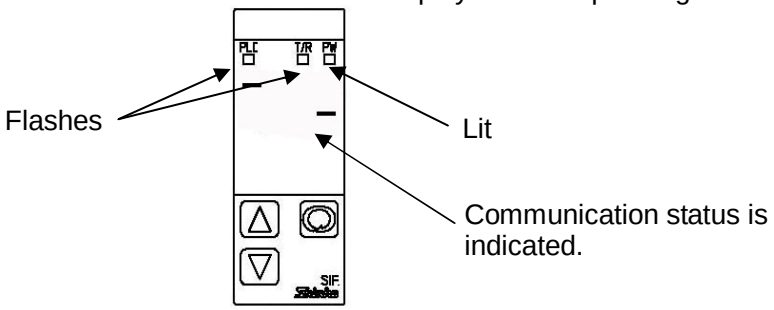

(Fig. 6-3)

(Table 6-2)

Parameter display	Communication status
----	If “Flexible address selection” is selected during the PLC memory allocation selection, ---- is indicated until the SIF-400 identifies Communication parameter setting completion flag 1 or 2
[□□_] → [□_□] → [_□□] → [_□□] → [□□ '] → [' □□]	Normal
ErrP	Communication errors between the SIF-400 and PLC
Errc	Communication error between the SIF-400 and controller (This is indicated even if an error occurred to only 1 connected controller.)

● **Basic operation for setup**

Setup is conducted in the Parameter setting mode.
To enter the Parameter setting mode, press the ⬭ key for appprox. 3 seconds in the Communication mode.
Set or select an item with the △ or ▽ key. Register the value with the ⬭ key. See (Fig. 6-4).

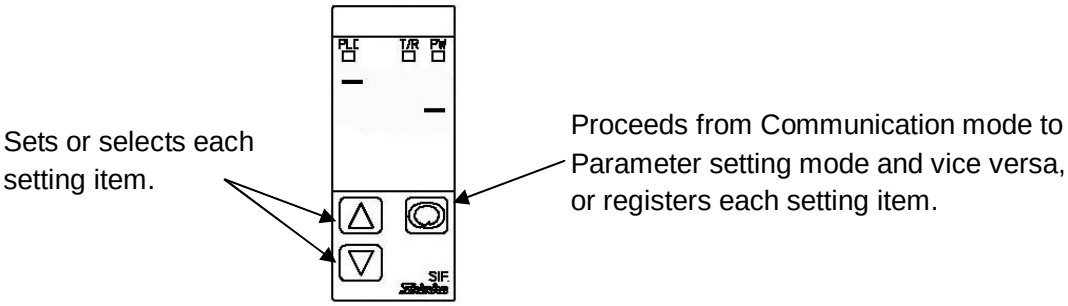

(Fig. 6-4)

● **Indication of Parameter display**

When a controller model is selected, selected item characters and selected model are indicated alternately. See (Fig. 6-5).

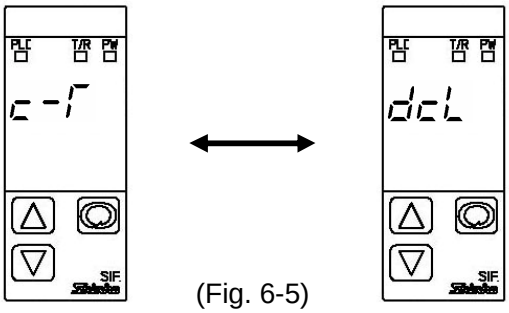

(Fig. 6-5)

● **Indication of Parameter display in the Parameter setting mode.**

c-r□ ⟷ dcL□

This means that c-r□ and dcL□ are indicated alternately.

6.1 Operation flowchart

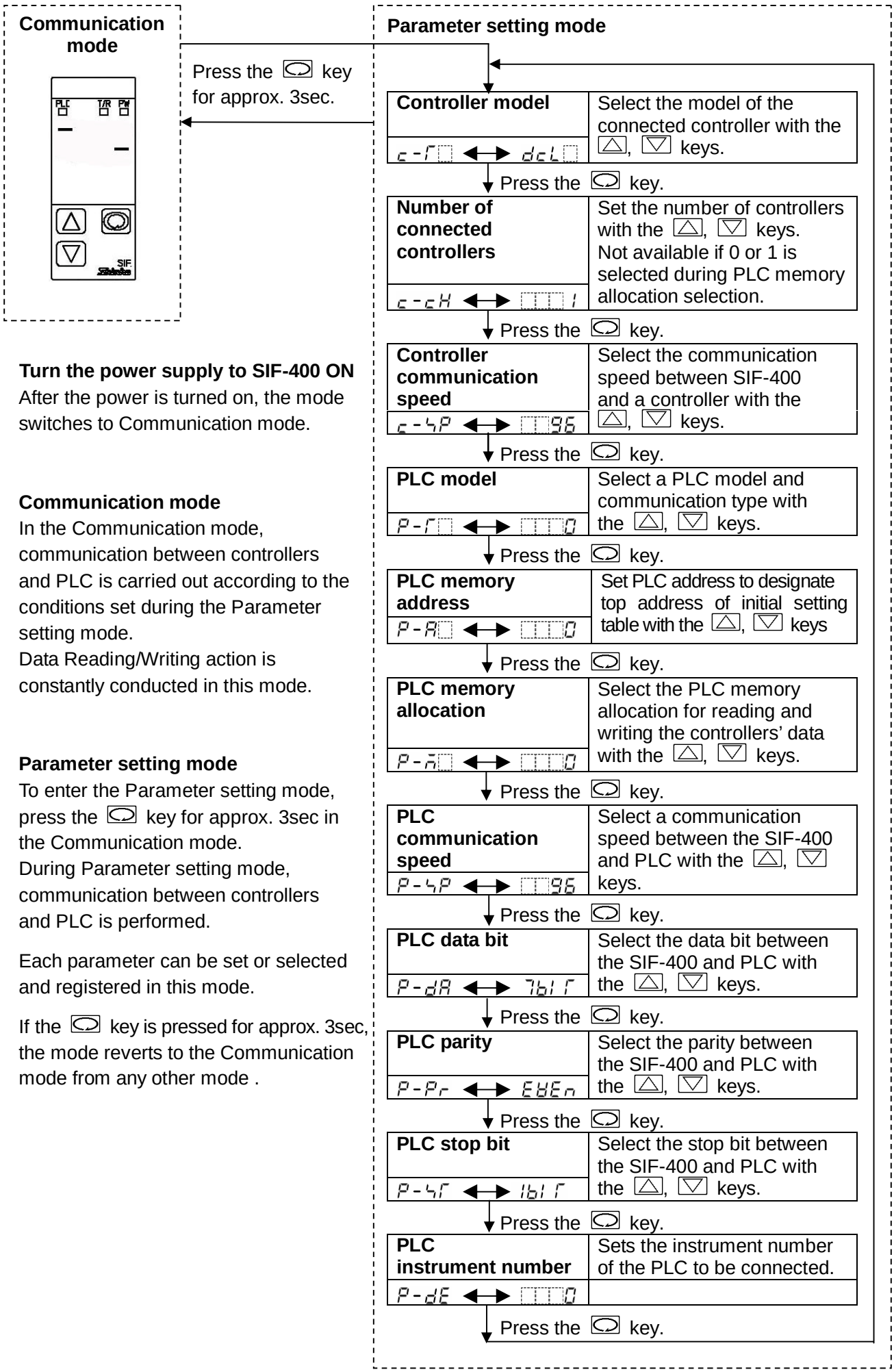

Turn the power supply to SIF-400 ON
After the power is turned on, the mode switches to Communication mode.

Communication mode
In the Communication mode, communication between controllers and PLC is carried out according to the conditions set during the Parameter setting mode.
Data Reading/Writing action is constantly conducted in this mode.

Parameter setting mode
To enter the Parameter setting mode, press the key for approx. 3sec in the Communication mode.
During Parameter setting mode, communication between controllers and PLC is performed.

Each parameter can be set or selected and registered in this mode.

If the key is pressed for approx. 3sec, the mode reverts to the Communication mode from any other mode .

6.2 Parameter setting mode

To enter the Parameter setting mode, press the key for approx. 3 seconds in the Communication mode.

Parameter display	Setting item, Function, Setting range	Default value
c-r□ ◀▶ dcL□	**Controller model selection**	DCL-33A
	• Select a connected controller model with the △, ▽ keys. • dcL□: DCL-33A Jc□□: JCx-33A ncL□: NCL-13A JcL□: JCL-33A	
c-cH ◀▶ □□□1	**Number of connected controllers setting**	1
	• Set the number of connected controllers with the △, ▽ keys. • Not available if 0 or 1 is selected during PLC memory allocation selection. • Setting range: 1 to 20 units	
c-sP ◀▶ □□96	**Controller communication speed selection**	9600bps
	• Select the communication speed between the SIF-400 and controllers with the △, ▽ keys. Set the communication speed according to that of controllers. • □□96: 9600bps □192: 19200bps	
P-r□ ◀▶ □□□0	**PLC model selection**	Mitsubishi MELSEC D register QR/QW command

• Select the connected PLC model and communication type with the △, ▽ keys.

• Selection range

	PLC manufacturer and its model	Register	Communication command
□□□0	Mitsubishi MELSEC	D register	QR/QW command
□□□1	Mitsubishi MELSEC	R register	QR/QW command
□□□2	Mitsubishi MELSEC	D register	WR/WW command
□□□3	Mitsubishi MELSEC	R register	WR/WW command
□□□4	Omron SYSMAC	D register	RD/WR command
□□□5	Fuji MICREX-F	SI, W30	
□□□6	Yokogawa FA-M3	D register	WRD/WWR command
□□□7	LG MASTER-K series	D register	RSB/WSB command

Note

Compatible host link units and their manufacturers

PLC manufacturer	Host link unit model
Mitsubishi Electric Corp.	AJ71UC24, A1SJ71UC24-R2/R4/PRF, A1SJ71C24-R2/R4/PRF, QJ71C24
Omron Corp.	LK201-V1, LK202-V1, CS1W-SCU21-V1, CJ1W-SCU21, CJ1W-SCU41
Fuji Electric Co., Ltd.	NC1L-RS2, NC1L-RS4
Yokogawa Electric Corp.	F3LC11-2N, F3LC11-1F, F3LC12-1F
LG Industrial systems	G7L-CUEB, G7L-CUEC

Parameter display	Setting item, Function, Setting range	Default value
P-A□ ◀▶ □□□0	**PLC memory address setting**	Address 0

• Sets PLC address in which the top address of the initial setting table is designated with the △ or ▽ key.
Available when “Flexible address selection” is selected during PLC memory allocation selection.
For Yokogawa PLC FA-M3 or LG MASTER-K, Address 0 is not usable. Set the addresses from 1.

• Selection range: Address 0 to 9997

• Usage example
If PLC address 0 has been already used, or when connecting more than 32 units of controllers, use the PLC memory address.
When connecting more than 32 units of controllers, use the host link unit with 2 serial communication ports, and set PLC memory address to 2 different values as shown below. Then the top address of the initial setting table can be set, and more than 32 units of data can be managed.

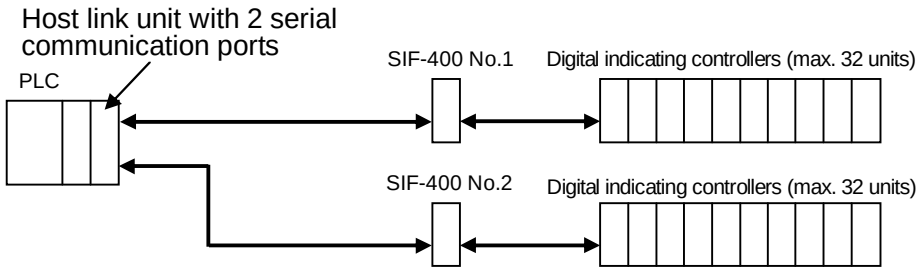

When Mitsubishi MELSEC QR/QW command D register is selected

(e.g.) PLC memory address of SIF-400 No.1 is set to address 0.

Address	Description
D0000 (decimal)	Top address (1000) of initial setting table
D0001	Communication parameter setting completion flag 1
D0002	Communication parameter setting completion flag 2

(e.g.) PLC memory address of SIF-400 No.2 is set to address 10.

Address	Description
D0010 (decimal)	Top address (2000) of initial setting table
D0011	Communication parameter setting completion flag 1
D0012	Communication parameter setting completion flag 2

Parameter display	Setting item, Function, Setting range	Default value
P-n□ ◀▶ □□□0	**PLC memory allocation selection**	Flexible address selection (memory allocation per item)

• Select PLC memory allocation for reading and writing controllers' data with the △, ▽ keys.

• Selection range

When Mitsubishi MELSEC QR/QW command is selected during PLC model selection.

	Memory allocation	
	D register area selection	R register area selection
□□□0	Flexible address selection (memory allocation per item)	
□□□1	Flexible address selection (memory allocation per channel)	
	Fixed address	
□□□2	D0000 to D0459	R0000 to R0459
□□□3	D0500 to D0959	R0500 to R0959
□□□4	D1000 to D1459	R1000 to R1459
□□□5	D1500 to D1959	R1500 to R1959
□□□6	D2000 to D2459	R2000 to R2459
□□□7	D2500 to D2959	R2500 to R2959
□□□8	D3000 to D3459	R3000 to R3459
□□□9	D3500 to D3959	R3500 to R3959
□□10	D4000 to D4459	R4000 to R4459
□□11	D4500 to D4959	R4500 to R4959
□□12	D5000 to D5459	R5000 to R5459
□□13	D5500 to D5959	R5500 to R5959
□□14	D6000 to D6459	R6000 to R6459

When Mitsubishi MELSEC WR/WW command is selected during PLC model selection

	Memory allocation	
	D register area selection	R register area selection
□□□0	Flexible address selection (memory allocation per item)	
□□□1	Flexible address selection (memory allocation per channel)	
	Fixed address	
□□□2	D0000 to D0459	R0000 to R0459
□□□3	D0500 to D0959	R0500 to R0959
□□□4	Unused	R1000 to R1459
□□□5	Unused	R1500 to R1959
□□□6	Unused	R2000 to R2459
□□□7	Unused	R2500 to R2959
□□□8	Unused	R3000 to R3459
□□□9	Unused	R3500 to R3959
□□10	Unused	R4000 to R4459
□□11	Unused	R4500 to R4959
□□12	Unused	R5000 to R5459
□□13	Unused	R5500 to R5959
□□14	Unused	R6000 to R6459

Parameter display	Setting item, Function, Setting range	Default value
P-n□ ◄► □□□0	When Omron SYSMAC is selected during PLC model selection.	

	Memory allocation
	D register area
□□□0	Flexible address selection (memory allocation per item)
□□□1	Flexible address selection (memory allocation per channel)
□□□2	Fixed address D0000 to D0459
□□□3	Fixed address D0500 to D0959
□□□4	Fixed address D1000 to D1459
□□□5	Fixed address D1500 to D1959
□□□6	Fixed address D2000 to D2459
□□□7	Fixed address D2500 to D2959
□□□8	Fixed address D3000 to D3459
□□□9	Fixed address D3500 to D3959
□□10	Fixed address D4000 to D4459
□□11	Fixed address D4500 to D4959
□□12	Fixed address D5000 to D5459
□□13	Fixed address D5500 to D5959
□□14	Fixed address D6000 to D6459

If Fuji MICREX-F is selected during PLC model selection

	Memory allocation
	File area W30
□□□0	Flexible address selection (memory allocation per item)
□□□1	Flexible address selection (memory allocation per channel)
□□□2	Fixed address W30.0000 to W30.0459
□□□3	Fixed address W30.0500 to W30.0959
□□□4	Fixed address W30.1000 to W30.1459
□□□5	Fixed address W30.1500 to W30.1959
□□□6	Fixed address W30.2000 to W30.2459
□□□7	Fixed address W30.2500 to W30.2959
□□□8	Fixed address W30.3000 to W30.3459
□□□9	Unused
□□10	Unused
□□11	Unused
□□12	Unused
□□13	Unused
□□14	Unused

If Yokogawa FA-M3 is selected during PLC model selection

	Memory allocation
	D register area
□□□0	Flexible address selection (memory allocation per item)
□□□1	Flexible address selection (memory allocation per channel)
□□□2	Fixed address D00001 to D00460
□□□3	Fixed address D00500 to D00959
□□□4	Fixed address D01000 to D01459
□□□5	Fixed address D01500 to D01959
□□□6	Fixed address D02000 to D02459
□□□7	Fixed address D02500 to D02959
□□□8	Fixed address D03000 to D03459
□□□9	Fixed address D03500 to D03959
□□10	Fixed address D04000 to D04459
□□11	Fixed address D04500 to D04959
□□12	Fixed address D05000 to D05459
□□13	Fixed address D05500 to D05959
□□14	Fixed address D06000 to D06459

P-n□ ◀▶ □□□0

When LG MASTER-K is selected during PLC model selection.

	Memory allocation
	D register area
□□□0	Flexible address selection (memory allocation per item)
□□□1	Flexible address selection (memory allocation per channel)
□□□2	Fixed address D00001 to D00460
□□□3	Fixed address D00500 to D00959
□□□4	Fixed address D01000 to D01459
□□□5	Fixed address D01500 to D01959
□□□6	Fixed address D02000 to D02459
□□□7	Fixed address D02500 to D02959
□□□8	Fixed address D03000 to D03459
□□□9	Fixed address D03500 to D03959
□□10	Fixed address D04000 to D04459
□□11	Fixed address D04500 to D04959
□□12	Fixed address Unused
□□13	Fixed address Unused
□□14	Fixed address Unused

P-sP ◀▶ □□96

PLC communication speed selection | 9600bps

- Select communication speed between SIF-400 and the PLC with the △, ▽ keys.
- □□96: 9600bps
  □192: 19200bps

P-dA ◀▶ 7bit

PLC data bit selection | 7 bits

- Select data bit between SIF-400 and the PLC with the △, ▽ keys.
- 7bit: 7 bits
  8bit: 8 bits

P-Pr ◀▶ EvEn

PLC parity selection | Even

- Select parity between SIF-400 and the PLC with the △, ▽ keys.
- nonE: No parity
  EvEn: Even
  odd□: Odd

P-sT ◀▶ 1bit

PLC stop bit selection | 1 bit

- Select stop bit between SIF-400 and the PLC with the △, ▽ keys.
- 1bit: 1 bit
  2bit: 2 bits

P-dE ◀▶ □□□0

PLC instrument number | 0

- Sets the instrument number of the PLC to be connected with the △, ▽ keys.
- Setting range: 0 to 99

7. Operations

Register type and address are predetermined depending on the PLC selected during PLC model selection and PLC memory allocation selection in the Parameter setting mode.

7.1 Flexible address selection (memory allocation per item)

When Mitsubishi MELSEC QR/QW command D register is used, and when PLC memory address is set to 0 (zero).

7.1.1 Top address and Communication parameter setting completion flags 1, 2 setting

Set top address of register area that SIF-400 uses, to address D0000 of the register.

After the power supply to the SIF-400 is turned on, the SIF-400 keeps reading PLC communication parameter setting completion flag 1 (D0001) and flag 2 (D0002).
After SIF-400 confirms that D0001 is 4660 (1234H) and D0002 is 22136 (5678H), it recognizes communication items to be used between SIF-400 and controllers by reading the number of connected controllers and the set value of Communication item Used/Unused selection set in the initial setting table (Section 7.1.2).

Prior to setting Communication parameter setting completion flag 1(D0001) to 4660 and flag 2(D0002) to 22136, set the number of connected controllers and Communication item Used/Unused first with the PLC program.

Top address of the register area is set to “nnnn” for explanation.

Address	Description	Contents
D0000 (Decimal)	Top address of the initial setting table (Determined by PLC memory address setting)	Top address (hereafter, nnnn)
D0001	Communication parameter setting completion flag 1	Fixed value 4660 (1234H)
D0002	Communication parameter setting completion flag 2	Fixed value 22136 (5678H)

7.1.2 Initial setting table (Number of connected controllers and Communication item Used/Unused setting)

To address nnnn, set the number of connected controllers.
To addresses from nnnn+1 to nnnn+6 (except nnnn+5), select a Communication item Used/Unused every 1 bit.

Address	Description	Contents
nnnn	Number of controllers connected to the SIF-400.	1 to 32 (hereafter, xx)
nnnn+1	Communication item Used/Unused selection flag 1 (1: Used, 0: Unused) Determines every 1 bit.	2^0: SV1 2^1: AT/Auto-reset selection 2^2: OUT1 proportional band setting 2^3: OUT2 proportional band setting 2^4: Integral time setting 2^5: Derivative time setting 2^6: OUT1 proportional cycle setting 2^7: OUT2 proportional cycle setting 2^8: A1 value setting 2^9: A2 value setting 2^{10}: Heater burnout alarm value setting 2^{11}: Loop break alarm span setting 2^{12}: Loop break alarm time setting 2^{13}: Set value lock selection 2^{14}: SV high limit setting 2^{15}: SV low limit setting

nnnn+2	Communication item Used/Unused selection flag 2 (1: Used, 0: Unused) Determines every 1 bit.	2^0: Sensor correction setting 2^1: Overlap/Dead band setting 2^2: PV filter time constant setting 2^3: OUT1 high limit setting 2^4: OUT1 low limit setting 2^5: OUT1 ON/OFF action hysteresis 2^6: OUT2 action mode selection 2^7: OUT2 high limit setting 2^8: OUT2 low limit setting 2^9: OUT2 ON/OFF action hysteresis 2^{10}: A1 type selection 2^{11}: A2 type selection 2^{12}: A1 hysteresis setting 2^{13}: A2 hysteresis setting 2^{14}: A1 action delayed timer setting 2^{15}: A2 action delayed timer setting
nnnn+3	Communication item Used/Unused selection flag 3 (1: Used, 0: Unused) Determines every 1 bit.	2^0: OUT/OFF selection 2^1: A1 Energized/De-energized selection 2^2: A2 Energized/De-energized selection 2^3: Input type selection 2^4: Direct/Reverse control action selection 2^5: AT bias setting 2^6: ARW setting 2^7: A1 Hold function selection 2^8: Scaling high limit setting 2^9: Scaling low limit setting 2^{10}: Decimal point place selection 2^{11}: Auto/Manual control selection 2^{12}: Manual control MV setting 2^{13}: Manual reset setting 2^{14}: A3 value setting 2^{15}: A4 value setting
nnnn+4	Communication item Used/Unused selection flag 4 (1: Used, 0: Unused) Determines every 1 bit.	2^0: PV reading 2^1: OUT1 MV reading 2^2: OUT2 MV reading 2^3: Controller status reading 2^4: Error status reading 2^5: CT1 input value reading 2^6: CT2 input value reading $2^{7\ to\ 15}$: Spare
nnnn+6	Communication item Used/Unused selection flag 5 (1: Used, 0: Unused) Determines every 1 bit.	2^0: A3 hysteresis setting 2^1: A4 hysteresis setting 2^2: A3 action delayed timer setting 2^3: A4 action delayed timer setting 2^4: A3 type selection 2^5: A4 type selection 2^6: A2 Hold function selection 2^7: Heater burnout alarm 2 value setting 2^8: Output status selection when input abnormal 2^9: Alarm Hold reset $2^{10\ to\ 15}$: Spare

Depending on the selected controllers, there are unusable communication items.
O: Usable X: Unusable

Setting item	DCL-33A	JCx-33A	NCL-13A	JCL-33A
SV1	O	O	O	O
AT/Auto-reset	O	O	O	O
OUT1 proportional band	O	O	O	O
OUT2 proportional band	X	O	O	O
Integral time	O	O	O	O
Derivative time	O	O	O	O
OUT1 proportional cycle	O	O	O	O
OUT2 proportional cycle	X	O	O	O
Alarm 1 value	O	O	O	O
Alarm 2 value	X	O	O	O
Heater burnout alarm value	O	O	O	X
Loop break alarm span	O	O	O	X
Loop break alarm time	O	O	O	X
Set value lock (*)	O	O	O	O
SV high limit	X	O	X	X
SV low limit	X	O	X	X
Sensor correction	O	O	O	O
Overlap/Dead band	X	O	O	O
PV filter time constant	O	O	O	O
OUT1 high limit	O	O	O	O
OUT2 low limit	O	O	O	O
OUT1 ON/OFF action hysteresis	O	O	O	O
OUT2 action mode	X	O	O	X
OUT2 high limit	X	O	O	X
OUT2 low limit	X	O	O	X
OUT2 ON/OFF action hysteresis	X	O	O	O
Alarm 1 type	O	O	O	O
Alarm 2 type	X	O	O	O
Alarm 1 hysteresis	O	O	O	O
Alarm 2 hysteresis	X	O	O	O
Alarm 1 action delayed timer	O	O	O	O
Alarm 2 action delayed timer	X	O	O	O
OUT/OFF	X	O	O	O
Alarm 1 Energized/De-energized	O	O	O	X
Alarm 2 Energized/De-energized	X	O	X	X
Input type	O	O	O	O
Direct/Reverse control action	O	O	O	O
AT bias	O	O	O	O
ARW	O	O	O	O
Alarm 1 Hold function	O	X	O	O
Scaling high limit	O	O	O	O
Scaling low limit	O	O	O	O
Decimal point place	O	O	X	O
Auto/Manual control	X	O	X	X
Manual control MV	X	O	X	X
Manual reset	O	X	O	O

(*) For the NCL-13A, Non-volatile memory data save
For the NCL-13A, Alarm 3 Hold and Alarm 4 Hold function are not usable.

Setting item	DCL-33A	JCx-33A	NCL-13A	JCL-33A
Alarm 3 value	X	X	O	X
Alarm 4 value	X	X	O	X
Alarm 3 hysteresis	X	X	O	X
Alarm 4 hysteresis	X	X	O	X
Alarm 3 action delayed timer	X	X	O	X
Alarm 4 action delayed timer	X	X	O	X
Alarm 3 type	X	X	O	X
Alarm 4 type	X	X	O	X
Alarm 2 Hold function	X	X	O	X
Heater burnout alarm 2 value	X	X	O	X
Output status selection when input abnormal	X	X	O	X
Alarm Hold reset	X	X	O	X
PV reading	O	O	O	O
OUT1 MV reading	O	O	O	O
OUT2 MV reading	X	O	O	O
Controller status reading	O	O	O	O
Error status reading	O	O	O	O
CT1 input value reading	X	X	O	X
CT2 input value reading	X	X	O	X

7.1.3 Error status reading

Error status between SIF-400 and controllers can be checked by using [2^4: Error status reading] of Communication item Used/Unused selection flag 4.

Data	Error status
0	Normal
1	Non-existent command
2	Unused
3	Value out of the setting range
4	Status which cannot be set (While AT is performing, etc.)
5	During setting mode by keypad operation
6	No response

7.1.4 Set value change flag setting

Set value change from the PLC is conducted as follows.

(1) When changing set values from the PLC, change the data memory value assigned to the item to be changed, then set the value to Set value change flag (address nnnn+5).

(2) SIF-400 reads the changed set value from the PLC register area via the value of the Set value change flag, and changes the set values of the controllers by sending a setting command to controllers.

(3) After reading is complete, the SIF-400 returns the Set value change flag to 0 (zero).

Address	Description	Contents
nnnn+5	Set value change flag (PLC sets the flag, and SIF-400 clears the flag by setting it to 0.)	0: No change 1: All setting items reading request (PLC ⟶ controllers) (Except for AT/Auto-reset selection) 2: SV1 change request 3: Change request of A1 value, A2 value, Heater burnout alarm value 4: Change request of OUT1 proportional band, OUT2 proportional band, Integral time, Derivative time and ARW 5: AT/Auto-reset selection 6: OUT/OFF selection change request 7: Change request of A1 type, A2 type, A3 type, A4 type, OUT1 proportional cycle and OUT2 proportional cycle 8: Change request of OUT1 high limit, OUT1 low limit, OUT2 high limit and OUT2 low limit 9: Change request of A3 value, A4 value and Heater burnout alarm 2 value 11(BH): All setting items writing request (Controllers ⟶ PLC)
nnnn+7 to nnnn+9	Spare	Unused

Set value change flags

1 : SIF-400 reads all setting item values selected during Communication item Used/Unused selection from the PLC register area, and changes the set values of the controllers by sending the setting command to the controllers.

2 to 9: SIF-400 changes the set values of the controllers by sending the setting command to the controllers.

11(BH): SIF-400 reads all setting item values of the controllers selected during Communication item Used/Unused selection, and overwrites the PLC register area with those values.

7.1.5 Setting items and data area

With an address of nnnn+10 or higher, the setting items selected during Communication item Used/Unused selection are assigned in numerical order to those controllers (from instrument number 0). "xx" represents the number of connected controllers which was set at address "nnnn".

Address	Description	Contents
nnnn+10 to nnnn+10+xx-1	The 1st setting item for which "Used" is selected during Communication item Used/Unused selection	For the setting items, value setting area For the reading items, read value storing area
nnnn+10+xx to nnnn+10+xx X 2-1	The 2nd setting item for which "Used" is selected during Communication item Used/Unused selection	For the setting items, value setting area For the reading items, read value storing area
nnnn+10+xx X 2 to nnnn+10+xx X 3-1	The 3rd setting item for which "Used" is selected during Communication item Used/Unused selection	For the setting items, value setting area For the reading items, read value storing area
nnnn+10+xx X (S-1) to nnnn+10+xx X S-1	The ordinal setting item (S) for which "Used" is selected during Communication item Used/Unused selection	For the setting items, value setting area For the reading items, read value storing area

7.1.6 Initial setting procedures after the power to the PLC is turned ON

(e.g.) Number of connected controllers: 10
Mitsubishi MELSEC QR/QW command D register is used.
Top address: D1000
Items: SV1 setting and PV reading

Contents of PLC processing	Example (Data: Hexadecimal figures)
Set the top address (1000).	D0000 = 03E8H
Set the number of connected controllers (10)	D1000 = 000AH
Set Communication item Used/Unused selection flag 1 (D1001 2^0 [bit0]: SV1: Used, Other: Unused)	D1001 = 0001H
Set Communication item Used/Unused selection flag 2 (D1002 All items: Unused)	D1002 = 0000H
Set Communication item Used/Unused selection flag 3 (D1003 All items: Unused)	D1003 = 0000H
Set Communication item Used/Unused selection flag 4. (D1004 2^0 [bit0]: PV reading: Used, Other: Unused)	D1004 = 0001H
Set Communication item Used/Unused selection flag 5. (D1006 All items: Unused)	D1006 = 0000H
Set Communication parameter setting completion flag 1 to the fixed value.	D0001 = 1234H
Set Communication parameter setting completion flag 2 to the fixed value.	D0002 = 5678H

Ladder program

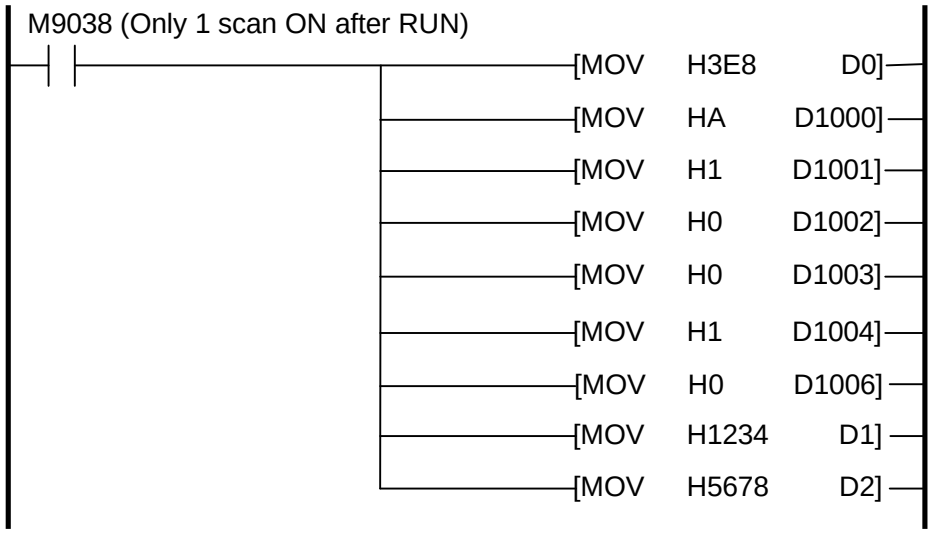

If Communication parameter setting completion flag 1 and 2 are set to the fixed value, the register is assigned as follows.
D1005: Set value change flag

Register	Item	Register	Item
D1010	SV1 setting (controller numbered 0)	D1020	Read PV (controller numbered 0)
D1011	SV1 setting (controller numbered 1)	D1021	Read PV (controller numbered 1)
D1012	SV1 setting (controller numbered 2)	D1022	Read PV (controller numbered 2)
D1013	SV1 setting (controller numbered 3)	D1023	Read PV (controller numbered 3)
D1014	SV1 setting (controller numbered 4)	D1024	Read PV (controller numbered 4)
D1015	SV1 setting (controller numbered 5)	D1025	Read PV (controller numbered 5)
D1016	SV1 setting (controller numbered 6)	D1026	Read PV (controller numbered 6
D1017	SV1 setting (controller numbered 7)	D1027	Read PV (controller numbered 7)
D1018	SV1 setting (controller numbered 8)	D1028	Read PV (controller numbered 8)
D1019	SV1 setting (controller numbered 9)	D1029	Read PV (controller numbered 9)

7.1.7 PLC PV reading

As the SIF-400 repeatedly writes PV to the register where PV is assigned, read the PV in the PLC register.
(e.g.) Instrument number 0, PV reading: Read the value of D1020.

7.1.8 Procedures of PLC SV1 writing

(e.g.) SV1 of the controller numbered 0 is changed to 100℃.

Order	Contents of PLC processing	Example (Data: Hexadecimal figures)
(1)	Set SV1 setting register of the controller numbered 0 to 100℃.	D1010 = 0064H
(2)	For the controller of which SV1 is not changed, the same value as the current one is set to the assigned register.	D1011 to D1019: The same value as the current one.
(3)	Set the Set value change flag to "2: SV1 change request".	D1005 = 0002H
(4)	Check if the set value change flag is cleared to "0", and confirms that setting process is complete.	Checks if D1005 = 0000H.

Ladder program

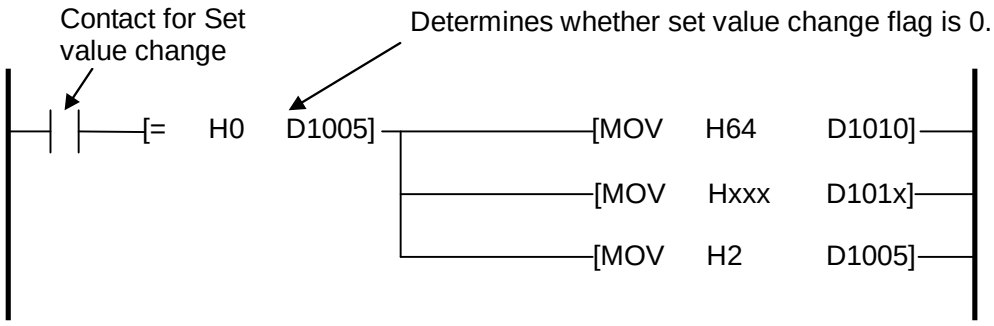

Notice

After set values have been changed, check the error status reading value if there are any errors in the setting contents. If errors have occurred, correct the data and resend it.

Action details and notes:

[AT (auto-tuning)]

When AT (auto-tuning) is performed, P, I, D and ARW values of the controller are written to each PLC data memory area respectively after AT is finished.
After values are written, AT bit is rewritten to 0 (zero).

[Alarm type]

If an alarm type of the controller is changed, the alarm value of the controller automatically becomes 0 (zero).
Therefore, be sure to set the alarm value again from the PLC after an alarm type is changed.

[Set value change flag]

When setting a Set value change flag, first check that all bits of the set value change flag are 0 (zero), then set the bit of requested setting change item to 1.
If the bit is set to 1 when some bits of the set value change flag are not 0 (zero), setting change may not be performed normally.

[Set value range]

The SIF-400 does not manage the setting range of all setting items of controllers.
When setting the values from the PLC, be sure to set the value within the setting range.

7.2 Flexible address selection (memory allocation per channel)

When Mitsubishi MELSEC QR/QW command D register is used, and when PLC memory address is set to 0 (zero)

7.2.1 Top address and Communication parameter setting completion flags 1, 2 setting

Set the top address of Register area that SIF-400 uses, to address D0000 of the register.

After the power supply to the SIF-400 is turned ON, the SIF-400 keeps reading PLC communication parameter setting completion flag 1 (D0001) and flag 2 (D0002).
After SIF-400 confirms that D0001 is 4660 (1234H) and D0002 is 22136 (5678H), it recognizes communication items to be used between SIF-400 and Controllers by reading the number of connected controllers and the set value of Communication item Used/Unused selection set in the initial setting table (Section 7.2.2).

Prior to setting Communication parameter setting completion flag 1 (D0001) to 4660 and flag 2 (D0002) to 22136, set the number of connected controllers and Communication item Used/Unused first with the PLC program.

Top address of the register area is set to “nnnn” for explanation.

Address	Description	Contents
D0000 (Decimal)	Top address of the initial setting table (Determined by PLC memory address setting)	Top address (hereafter, nnnn)
D0001	Communication parameter setting completion flag 1	Fixed value 4660 (1234H)
D0002	Communication parameter setting completion flag 2	Fixed value 22136 (5678H)

7.2.2 Initial setting table (Number of connected controllers and Communication item Used/Unused setting)

To address nnnn, set the number of connected controllers.
To addresses from nnnn+1 to nnnn+6 (except nnnn+5), select a Communication item Used/Unused every 1 bit.

Address	Description	Contents
nnnn	Number of controllers connected to the SIF-400.	1 to 32 (hereafter, xx)
nnnn+1	Communication item Used/Unused selection flag 1 (1: Used, 0: Unused) Determines every 1 bit.	2^0: SV1 2^1: AT/Auto-reset selection 2^2: OUT1 proportional band setting 2^3: OUT2 proportional band setting 2^4: Integral time setting 2^5: Derivative time setting 2^6: OUT1 proportional cycle setting 2^7: OUT2 proportional cycle setting 2^8: A1 value setting 2^9: A2 value setting 2^{10}: Heater burnout alarm value setting 2^{11}: Loop break alarm span setting 2^{12}: Loop break alarm time setting 2^{13}: Set value lock selection 2^{14}: SV high limit setting 2^{15}: SV low limit setting

Depending on the selected controllers, there may be unusable communication items. (See pages 32, 33.)

nnnn+2	Communication item Used/Unused selection flag 2 (1: Used, 0: Unused) Determines every 1 bit.	2^0: Sensor correction setting 2^1: Overlap/Dead band setting 2^2: PV filter time constant setting 2^3: OUT1 high limit setting 2^4: OUT1 low limit setting 2^5: OUT1 ON/OFF action hysteresis setting 2^6: OUT2 action mode selection 2^7: OUT2 high limit setting 2^8: OUT2 low limit setting 2^9: OUT2 ON/OFF action hysteresis setting 2^{10}: A1 type selection 2^{11}: A2 type selection 2^{12}: A1 hysteresis setting 2^{13}: A2 hysteresis setting 2^{14}: A1 action delayed timer setting 2^{15}: A2 action delayed timer setting
nnnn+3	Communication item Used/Unused selection flag 3 (1: Used, 0: Unused) Determines every 1 bit.	2^0: OUT/OFF selection 2^1: A1 Energized/De-energized selection 2^2: A2 Energized/De-energized selection 2^3: Input type selection 2^4: Direct/Reverse control action selection 2^5: AT bias setting 2^6: ARW setting 2^7: A1 Hold function selection 2^8: Scaling high limit setting 2^9: Scaling low limit setting 2^{10}: Decimal point place selection 2^{11}: Auto/Manual control selection 2^{12}: Manual control MV setting 2^{13}: Manual reset setting 2^{14}: A3 value setting 2^{15}: A4 value setting
nnnn+4	Communication item Used/Unused selection flag 4 (1: Used, 0: Unused) Determines every 1 bit.	2^0: PV reading 2^1: OUT1 MV reading 2^2: OUT2 MV reading 2^3: Controller status reading 2^4: Error status reading 2^5: CT1 input value reading 2^6: CT2 input value reading $2^{7 \text{ to } 15}$: Spare
nnnn+6	Communication item Used/Unused selection flag 5 (1: Used, 0: Unused) Determines every 1 bit.	2^0: A3 hysteresis setting 2^1: A4 hysteresis setting 2^2: A3 action delayed timer setting 2^3: A4 action delayed timer setting 2^4: A3 type selection 2^5: A4 type selection 2^6: A2 Hold function selection 2^7: Heater burnout alarm 2 value setting 2^8: Output status selection when input abnormal 2^9: Alarm Hold reset $2^{10 \text{ to } 15}$: Spare

Depending on the selected controllers, there may be unusable communication items. (See pages 32, 33.)

7.2.3 Error status reading

Error status between SIF-400 and controllers can be checked by using [2^4: Error status reading] of Communication item Used/Unused selection flag 4.

Data	Error status
0	Normal
1	Non-existent command
2	Unused
3	Value out of the setting range
4	Status which cannot be set (While AT is performing, etc.)
5	During setting mode by keypad
6	No response

7.2.4 Set value change flag setting

Set value change from the PLC is conducted as follows.

(1) When changing set values from the PLC, change the data memory value assigned to the item to be changed, then set the value to Set value change flag (address nnnn+5).

(2) SIF-400 reads the changed set value from the PLC register area via the value of Set value change flag, and changes the set values of the controllers by sending a setting command to controllers.

(3) After reading is complete, SIF-400 returns Set value change flag to 0 (zero).

Address	Description	Contents
nnnn+5	Set value change flag (PLC sets the flag, and SIF-400 clears the flag by setting it to 0.)	0: No change 1: All setting items reading request (PLC → controllers) (Except for AT/Auto-reset selection) 2: SV1 change request 3: Change request of A1 value, A2 value and Heater burnout alarm value 4: Change request of OUT1 proportional band, OUT2 proportional band, Integral time, Derivative time and ARW 5: AT/Auto-reset selection 6: OUT/OFF selection change request 7: Change request of A1 type, A2 type, A3 type, A4 type, OUT1 proportional cycle and OUT2 proportional cycle 8: Change request of OUT1 high limit, OUT1 low limit, OUT2 high limit and OUT2 low limit 9: Change request of A3 value, A4 value and Heater burnout alarm 2 value 11(BH): All setting items writing request (Controllers → PLC)
nnnn+7 to nnnn+9	Spare	Unused

Set value change flags

1 : SIF-400 reads all setting item values selected during Communication item Used/Unused selection from the PLC register area, and changes the set values of the controllers by sending the setting command to the controllers.

2 to 9 : SIF-400 changes the set values of the controllers by sending the setting command to the controllers.

11(BH): SIF-400 reads all setting item values of the controllers selected during Communication item Used/Unused selection, and overwrites the PLC register area with those values.

7.2.5 Setting items and data area

With an address of nnnn+10 or higher, the setting items selected during Communication item Used/Unused selection are assigned in sequence to those controllers (from instrument number 0).

"xx" represents the number of connected controllers which was set at address nnnn.
"ss" represents the number of setting items selected by Communication item Used/Unused selection flag 1 to 5 (nnnn+1 to nnnn+4 and nnnn+6).

Address	Description	Contents
nnnn+10 to nnnn+10+ss-1	Setting and reading items of instrument number 0	For the setting items, value setting area For the reading items, read value storing area
nnnn+10+ss to nnnn+10+ss X 2-1	Setting and reading items of instrument number 1	For the setting items, value setting area For the reading items, read value storing area
nnnn+10+ss X 2 to nnnn+10+ss X 3-1	Setting and reading items of instrument number 2	For the setting items, value setting area For the reading items, read value storing area
nnnn+10+ss X (xx-1) to nnnn+10+ss X xx-1	Setting and reading items of instrument number (xx-1)	For the setting items, value setting area For the reading items, read value storing area

7.2.6 Procedures of initial setting after the power to the PLC is turned ON

(e.g.) Number of connected controllers: 10
Mitsubishi MELSEC QR/QW command D register is used.
Top address: D1000.
Items: SV1 setting and PV reading

Contents of PLC processing	Example (Data: Hexadecimal figures)
Set the top address (1000).	D0000 = 03E8H
Set the number of connected controllers (10)	D1000 = 000AH
Set Communication item Used/Unused selection flag 1 (D1001 2^0 [bit0]: SV1: Used, Other: Unused)	D1001 = 0001H
Set Communication item Used/Unused selection flag 2 (D1002 All items: Unused)	D1002 = 0000H
Set Communication item Used/Unused selection flag 3 (D1003 All items: Unused)	D1003 = 0000H
Set Communication item Used/Unused selection flag 4. (D1004 2^0 [bit0]: PV reading: Used, Other: Unused)	D1004 = 0001H
Set Communication item Used/Unused selection flag 5. (D1006 All items: Unused)	D1006 = 0000H
Set Communication parameter setting completion flag 1 to the fixed value.	D0001 = 1234H
Set Communication parameter setting completion flag 2 to the fixed value.	D0002 = 5678H

Ladder program

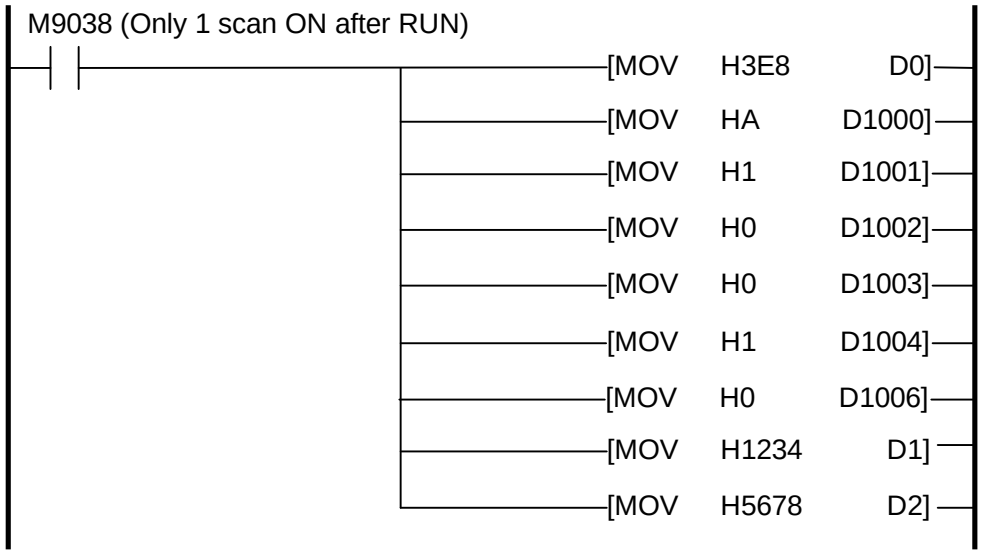

If Communication parameter setting completion flag 1 and 2 are set to the fixed value, the register is assigned as follows.
D1005: Set value change flag

Register	Item	Register	Item
D1010	SV1 setting (controller numbered 0)	D1020	SV1 setting (controller numbered 5)
D1011	Read PV (controller numbered 0)	D1021	Read PV (controller numbered 5)
D1012	SV1 setting (controller numbered 1)	D1022	SV1 setting (controller numbered 6)
D1013	Read PV (controller numbered 1)	D1023	Read PV (controller numbered 6)
D1014	SV1 setting (controller numbered 2)	D1024	SV1 setting (controller numbered 7)
D1015	Read PV (controller numbered 2)	D1025	Read PV (controller numbered 7
D1016	SV1 setting (controller numbered 3)	D1026	SV1 setting (controller numbered 8)
D1017	Read PV (controller numbered 3)	D1027	Read PV (controller numbered 8)
D1018	SV1 setting (controller numbered 4)	D1028	SV1 setting (controller numbered 9)
D1019	Read PV (controller numbered 4)	D1029	Read PV (controller numbered 9)

7.2.7 PLC PV reading

As the SIF-400 repeatedly writes PV to the register where PV is assigned, read the PV in the PLC register.
(e.g.) Instrument number 0, PV reading: Read the value of D1011.

7.2.8 Procedures of PLC SV1 writing

(e.g.) SV1 of the controller numbered 0 is changed to 100℃.

Order	Contents of PLC processing	Example (Data: Hexadecimal figures)
(1)	Set SV1 setting register of the controller numbered 0 to 100℃.	D1010 = 0064H
(2)	For the controller of which SV1 is not changed, the same value as the current one is set to the assigned register.	D1012, D1014, D1016, D1018, D1020, D1022, D1024, D1026, D1028: The same value as the current one.
(3)	Set the Set value change flag to "2: SV1 change request".	D1005 = 0002H
(4)	Check if the Set value change flag is cleared to "0", and confirms that setting process is complete.	Checks if D1005 = 0000H.

Ladder program

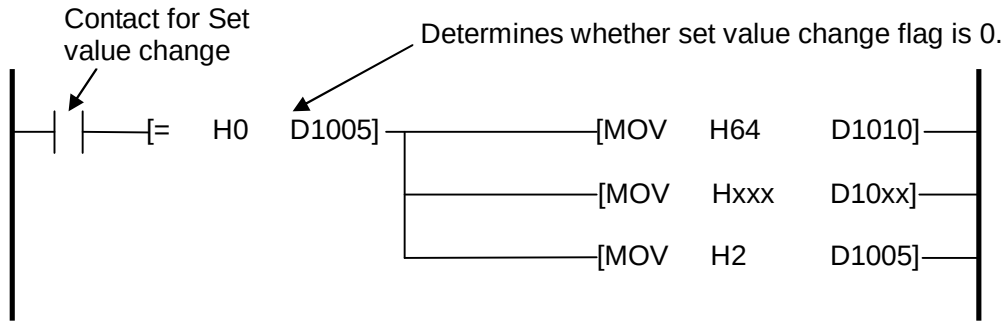

Notice

After changing set values, check the error status reading value if there are any errors in setting contents. If errors have occurred, correct the data and resend it.

Action details and notes

Action details and notes are the same as those of the flexible address selection (memory allocation per item). (See p.37.)

7.3 Fixed address

After the power supply to the SIF-400 is turned on, the register to be used is determined by the selected value during **PLC model selection and PLC memory allocation selection,** and designated setting and reading items are assigned.

For reading item (PLC), data is repeatedly written to the assigned register area.
(Refer to "7.2.7 PLC PV reading" on p.42).
For setting item (PLC), data is set on the controllers by the set value change flag.
(Refer to "7.2.8 Procedures of PLC SV1 writing" on p.43).

Register area allocation for setting and reading items

The following selection conditions are used for explanation.
PLC model selection: 0 (Mitsubishi MELSEC D register QR/QW command)
PLC memory allocation selection: 2 (D0000 to D0459)

Register area	Communication item		Data quantity	Attribute
D0000 to D0019	SV1	Ch0 to Ch19	20	R/W
D0020 to D0039	A1 value	Ch0 to Ch19	20	R/W
D0040 to D0059	A2 value (*1)	Ch0 to Ch19	20	R/W
D0060 to D0079	Heater burnout alarm value	Ch0 to Ch19	20	R/W
D0080 to D0099	OUT1 proportional band	Ch0 to Ch19	20	R/W
D0100 to D0119	OUT2 proportional band (*1)	Ch0 to Ch19	20	R/W
D0120 to D0139	Integral time	Ch0 to Ch19	20	R/W
D0140 to D0159	Derivative time	Ch0 to Ch19	20	R/W
D0160 to D0179	ARW	Ch0 to Ch19	20	R/W
D0180 to D0199	OUT1 proportional cycle	Ch0 to Ch19	20	R/W
D0200 to D0219	OUT2 proportional cycle (*1)	Ch0 to Ch19	20	R/W
D0220 to D0239	AT/Auto- reset	Ch0 to Ch19	20	R/W
D0240 to D0259	OUT/OFF selection (*1)	Ch0 to Ch19	20	R/W
D0260 to D0279	PV	Ch0 to Ch19	20	RO
D0280 to D0299	OUT1 MV	Ch0 to Ch19	20	RO
D0300 to D0319	OUT2 MV (*1)	Ch0 to Ch19	20	RO
D0320 to D0339	Controller status (*2)	Ch0 to Ch19	20	RO
D0340 to D0359	CT1 input value (*3)	Ch0 to Ch19	20	RO
D0360 to D0379	Spare			
D0380	Communication status(*4)		1	RO
D0381	Set value change flag(*5)		1	R/W
D0382	Communication update flag(*6)		1	RO
D0400 to D0419	A1 type	Ch0 to Ch19	20	R/W
D0420 to D0439	A2 type (*1)	Ch0 to Ch19	20	R/W
D0440 to D0459	Sensor correction value	Ch0 to Ch19	20	R/W

R/W: Items that SIF-400 reads and writes from/to the PLC.
RO: Items that SIF-400 reads from the controllers and writes to the PLC.

(*1): This item is not usable if the digital indicating controller DCL-33A is connected.
(*2): When NCL-13A is connected, controller status B14 is allocated to Control Allowed/Prohibited
0: Control prohibited 1: Control allowed
(*3): Not usable when connecting the DCL-33A or JCx-33A.
(*4) Communication status
0: Writing of the monitoring value (Controller ⟶ SIF-400 ⟶ PLC)
1: Set value reading (PLC ⟶ SIF-400 ⟶ Controller)
2: Set value writing (Controller ⟶ SIF-400 ⟶ PLC)
3: Communication error (This error is different from that of Flexible address selection.
"3" is returned in case of non-existent command or no response.)
(*5) Set value change flags are the same as those of the Flexible address selection. See pages 34, 40.
(*6) If there is no problem in communication status with the PLC, B0 of Communication update flag reverses every communication cycle.
If communication with the PLC is impossible due to errors or wiring, errors can be determined by monitoring B0 from the PLC.

8. Specifications

Model PLC interface unit
Name SIF-400
Supply voltage 100 to 240V AC 50/60Hz, or 24V AC/DC 50/60Hz
Allowable fluctuation range
100 to 240V AC: 85 to 264V AC
24V AC/DC: 20 to 28V AC/DC
Communication circuit
Between SIF-400 and PLC : RS-232C, RS-485, RS-422A (terminal)
Between SIF-400 and Controllers : RS-485 (Modular jack)
External dimensions 22.5 x 75 x 100mm (W x H x D)
Mounting DIN rail mounting
Display Parameter display: Green LED 4-digit, character size: 7.5 x 4.1mm (H x W)
Indicator PLC communication indicator (Yellow)
Controller communication indicator (Yellow)
Power indicator (Green)
Function Controller communication function
Communicates with the digital indicating controller selected during Parameter setting mode.

Controller model selection	DCL-33A, JCx-33A, NCL-13A, JCL-33A (Selectable by keypad) (Default value: DCL-33A)
Communication interface	RS-485
Communication method	Half-duplex communication start-stop synchronization
Communication speed	19200bps, 9600bps (Selectable by keypad) (Default value: 9600bps)
Data format	Start bit : 1 (Fixed value) Data bit : 7 (Fixed value) Parity : Even (Fixed value) Stop bit : 1 (Fixed value)

PLC communication function
Communicates with the PLC selected during Parameter setting mode.

PLC model selection	Mitsubishi MELSEC Omron SYSMAC Fuji MICREX-F Yokogawa FA-M3 LG MASTER-K series
Communication line	RS-232C/RS-485/RS-422A RS-422A Built-in terminator (200Ω) between RXA and RXB
Communication method	Half-duplex communication start-stop synchronization
Communication speed	19200bps, 9600bps (Selectable by keypad) (Default value: 9600bps)
Data format	Start bit : 1 Data bit : 7, 8 (Selectable by keypad) (Default: 7) Parity : No parity, Even, Odd (Selectable by keypad) (Default: Even) Stop bit : 1, 2 (Selectable by keypad) (Default: 1)
Instrument number	0 to 99 (Settable by keypad) (Default: 0)

Circuit insulation configuration

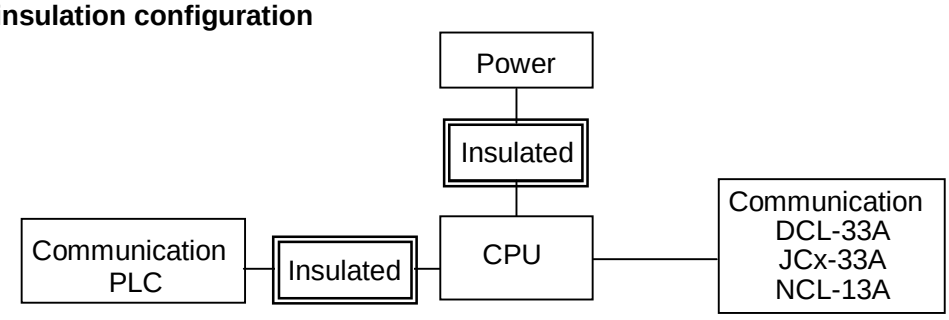

Insulation resistance 10MΩ or more, at 500V DC

Dielectric strength

Between Power terminal and Controller communication modular jack ---------- 1.5kV AC for 1 minute
Between Power terminal and PLC communication terminal ---------- 1.5kV AC for 1 minute
Between PLC communication terminal and Controller communication modular jack --- 1.5kV AC for 1 minute

Power consumption Approx. 5VA
Ambient temperature 0 to 50℃
Ambient humidity 35 to 85%RH (Non-condensing)
Weight Approx. 150g
Accessories Instruction manual 1 copy

9. Troubleshooting

If any malfunctions occur, refer to the following items after checking the power supply to the SIF-400, PLC and Digital indicating controllers.

⚠ Warning

Turn the power supply to the instrument OFF before wiring or checking.
Working with the power switched ON may result in severe injury or death due to Electric Shock.

• Problem: Communication failure

Presumed cause	Solution
Connector or communication cable is not connected.	Connect it securely.
Imperfect contact with the connector or broken cables	Securely connect the connector. Change the cable.
The wiring of communication cable (connector) is not correct.	Wire it correctly. • Digital indicating controller (pages.11 to 13) • Mitsubishi calculator link unit (p.16) • Omron host link unit (p.18) • Fuji Interface module (p.19) • Yokogawa personal computer link module (p.20) • LG MASTER-K series (p.21)
Setup of the SIF-400 is not correct.	Set proper specifications. (p.22-29)
Setup of the PLC (host link unit) is not correct.	Set proper specifications. • Mitsubishi Calculator link unit (AJ71UC24) (p.13) Calculator link unit (A1SJ71UC24-R4) (p.14) Micro PLC (FX2N-XXMR) (p.15) Serial communication unit (QJ71C24) (p.16) • Omron Host link unit (C200H-LK202-V1) (p.17) Serial communication unit (CS1W-SCU21-V1, CJ1W-SCU21, CJ1W-SCU41) (p.17) • Fuji Interface module (NC1L-RS4) (p.19) • Yokogawa Personal computer link module (F3LC11-2N) (p.20) • LG Industrial Systems MASTER-K series (p.21)
Initial setting of the PLC (host link unit) is not correct.	If “Flexible address selection” is selected during PLC memory allocation selection (p.27 - 29), initial setting for the PLC (host link unit) is required. • Flexible address selection (Memory allocation per item): See pages 30, 31, 35 and 36. • Flexible address selection (Memory allocation per channel): See pages 38, 39, 41 and 42.
Instrument number of the controller is duplicated.	Set the controllers’ instrument number from 0 in numerical order, referring to the Instruction manual for the controller.

10. Default value

Parameter display (Setting item ⟷ Set value)		Setting item	Setting range	Default value
c-Pn	dcL Jc ncL JcL	Controller model	DCL-33A JCx-33A NCL-13A JCL-33A	DCL-33A
c-cH	Set value	Number of connected controllers	1 to 20 units	1
c-bP	96 192	Controller communication speed	9600bps 19200bps	9600bps
P-Pn	0 1 2 3 4 5 6 7	PLC model	Mitsubishi D register QR/QW Mitsubishi R register QR/QW Mitsubishi D register WR/WW Mitsubishi R register WR/WW Omron SYSMAC Fuji MICREX-F Yokogawa FA-M3 LG MASTER-K series	Mitsubishi D register QR/QW
P-Ad	Set value	PLC memory address	Address 0 to 9997	Address 0
P-An	0 1 2 3 4 5 6 7 8 9 10 11 12 13 14	PLC memory allocation	Flexible address selection (memory allocation per item) (*1) Flexible address selection (memory allocation per channel) (*1) D0000 to D0459 (*2) D0500 to D0959 (*2) D1000 to D1459 (*2) D1500 to D1959 (*2) D2000 to D2459 (*2) D2500 to D2959 (*2) D3000 to D3459 (*2) D3500 to D3959 (*2) D4000 to D4459 (*2) D4500 to D4959 (*2) D5000 to D5459 (*2) D5500 to D5959 (*2) D6000 to D6459 (*2)	Flexible address selection (memory allocation per item)
P-bP	96 192	PLC communication speed	9600bps 19200bps	9600bps
P-dA	7bit 8bit	PLC data bit	7 8	7
P-Pr	nonE EvEn odd	PLC parity	No parity Even Odd	Even
P-St	1bit 2bit	PLC stop bit	1 2	1
P-dE	Set value	PLC instrument number	0 to 99	0

- Setting item characters and set value are indicated on the Parameter display every 0.5 seconds alternately.
- The setting range for PLC memory allocation selection: When Mitsubishi D register QR/QW is selected during PLC model selection.

(*1): Flexible address selection

(*2): Fixed address

***** Inquiry *****

For any inquiries about this unit, please contact our agency or the shop where you purchased the unit after checking the following.

	[Example]
• Model	SIF-400
• Serial number	No. xxxxxx

In addition to the above, please let us know the details of the malfunction, if any, and the operating conditions.

SHINKO TECHNOS CO., LTD.
OVERSEAS DIVISION

Reg. Office: 2-5-1, Senbahigashi, Minoo, Osaka, Japan
URL : http://www.shinko-technos.co.jp
E-mail : overseas@shinko-technos.co.jp
Tel : 81-72-727-6100
Fax: 81-72-727-7006

SIF41E7 2008.08